DIST	COUNTY	ROUTE	POST MILES TOTAL PROJECT	SHEET No	TOTAL SHEETS
03	SAC				

REGISTERED CIVIL ENGINEER 11/6/20 DATE

PLANS APPROVAL DATE

REGISTERED PROFESSIONAL ENGINEER TRUONG VIET PHAM No. 81809 Exp. 3/31/22 CIVIL STATE OF CALIFORNIA

The State of California or its officers or agents shall not be responsible for the accuracy or completeness of scanned copies of this plan sheet.

SACRAMENTO COUNTY
411 BRANCH CENTER ROAD
SACRAMENTO, CA 95827

MARK THOMAS & COMPANY, INC.
7300 FOLSOM BOULEVARD, SUITE 203
SACRAMENTO, CA 95826

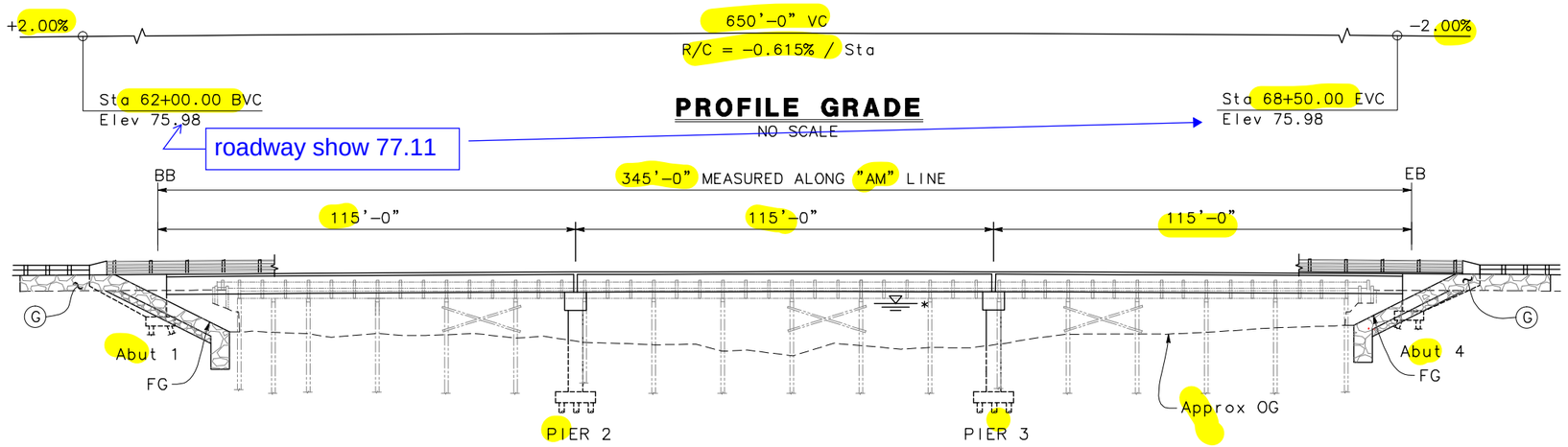

PROFILE GRADE

NO SCALE

LEGEND:

Indicates Existing Structure

Indicates Stage 1 Bridge Removal

Indicates Stage 2 Bridge Removal

ELEVATION

1" = 20'

* FOR "HYDRAULIC SUMMARY", SEE "FOUNDATION PLAN" SHEET

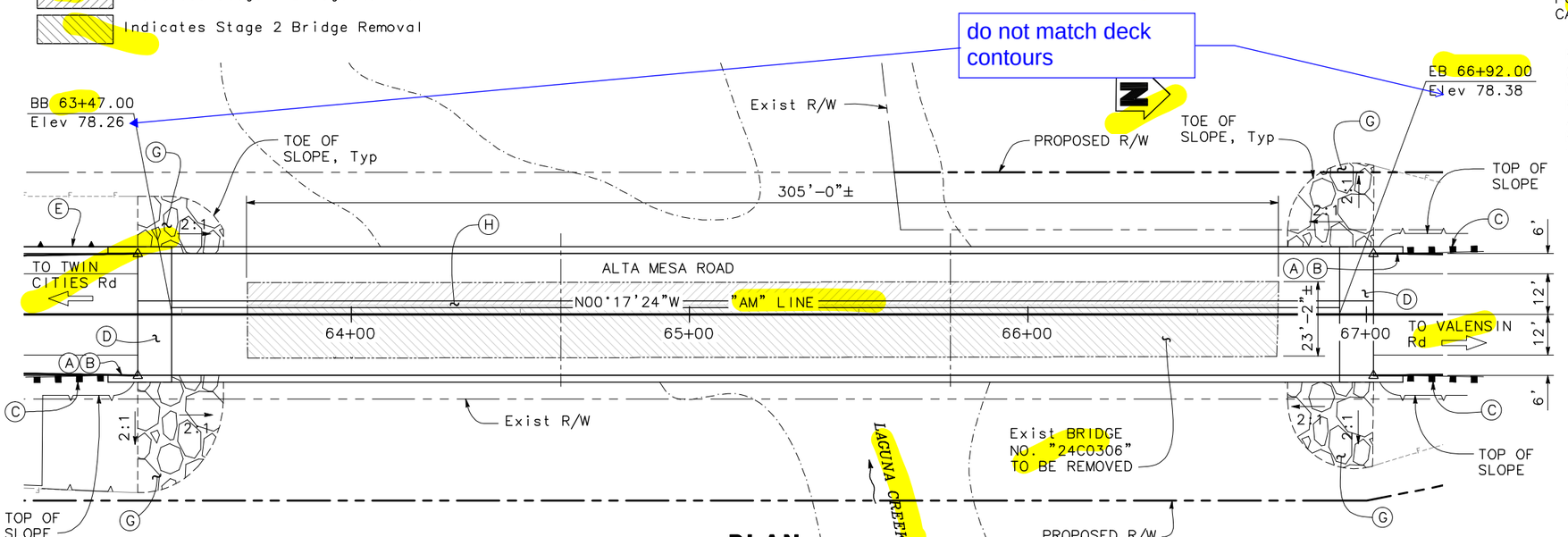

PLAN

1" = 20'

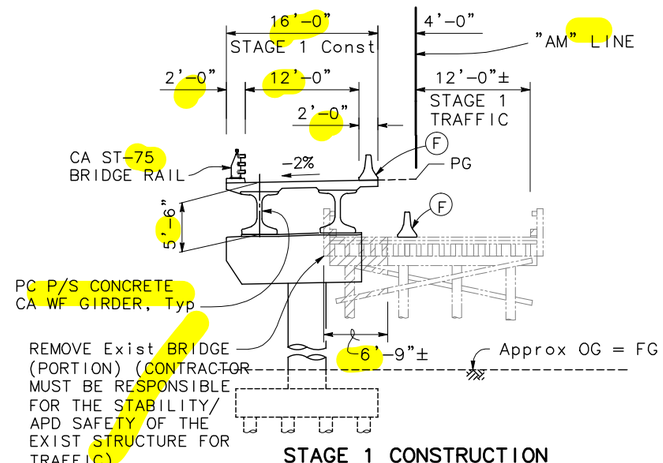

STAGE 1 CONSTRUCTION

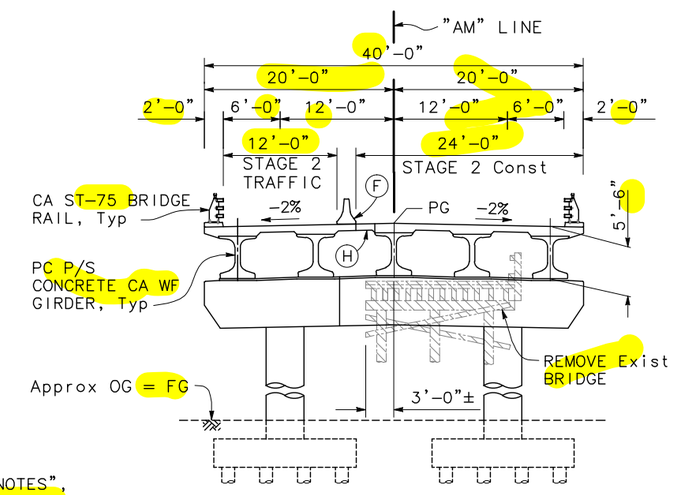

STAGE 2 CONSTRUCTION

TYPICAL SECTION

1/8" = 1'-0"

NOTE:
THE CONTRACTOR SHALL VERIFY ALL CONTROLLING FIELD DIMENSIONS BEFORE ORDERING OR FABRICATING ANY MATERIAL.

NOTES:

(A) Paint "LAGUNA CREEK BRIDGE"
(B) Paint "BR NO. 24C0306'
(C) MGS, SEE "CIVIL PLANS"
(D) Structure Approach Type EQ(10)
(E) Retaining Wall, See "CIVIL PLANS"
(F) Temp Rail (TYPE K), See "CIVIL PLANS"
(G) Rock Slope Protection, see "ROCK SLOPE PROTECTION" sheet
(H) 2'-0" Closure Pour

1. For "INDEX TO PLANS" and "GENERAL NOTES", see "INDEX TO PLAN" sheet.
2. For "PILE DATA TABLE" and "HYDROLOGIC SUMMARY", see "FOUNDATION PLAN" sheet.

DESIGN OVERSIGHT	DESIGN	BY T. PHAM	CHECKED Y. REN
	DETAILS	BY G. BOYKO	CHECKED T. PHAM
SIGN OFF DATE	QUANTITIES	BY C. GUARDADO	CHECKED N. FELDE

LOAD & RESISTANCE FACTOR DESIGN — LIVE LOADING: HL93 W/"LOW-BOY"; PERMIT DESIGN VIHICLE

LAYOUT — BY B. GALLLUCCI — CHECKED T. PHAM

SPECIFICATIONS — BY J. PASSALACQUA — PLANS AND SPECS COMPARED T. PHAM

PREPARED FOR THE SACRAMENTO COUNTY DEPARTMENT OF TRANSPORTATION

JASON HICKEY
PROJECT ENGINEER

BRIDGE NO. 24C0606
POST MILES

LAGUNA CREEK BRIDGE (REPLACE)
GENERAL PLAN

DESIGN GENERAL PLAN SHEET (ENGLISH) (REV.7/16/10)

ORIGINAL SCALE IN INCHES FOR REDUCED PLANS 0 1 2 3

UNIT: X
PROJECT NUMBER & PHASE: X

DISREGARD PRINTS BEARING EARLIER REVISION DATES

REVISION DATES (PRELIMINARY STAGE ONLY): 05/14/13 4/12/16 7/25/16 8/12/16 9/13/16 11/06/20 11/18/14 12/02/14 05/18/15

SHEET 1 OF 23

CONTRACT NO.: X PROJECT ID:

FILE => $REQUEST

USERNAME => $USER DATE PLOTTED => $DATE TIME PLOTTED => $TIME

V:\Sacramento Co-SA-13108-Alta Mesa Rd Bridge Replacement\CADD\Structures\01 AM_GP.dwg 10/29/2020 6:17 PM

DIST	COUNTY	ROUTE	POST MILES TOTAL PROJECT	SHEET No	TOTAL SHEETS
03	SAC				

REGISTERED CIVIL ENGINEER 11/6/20 DATE

PLANS APPROVAL DATE

REGISTERED PROFESSIONAL ENGINEER TRUONG VIET PHAM No. 81809 Exp. 3/31/22 CIVIL STATE OF CALIFORNIA

The State of California or its officers or agents shall not be responsible for the accuracy or completeness of scanned copies of this plan sheet.

SACRAMENTO COUNTY
411 BRANCH CENTER ROAD
SACRAMENTO, CA 95827

MARK THOMAS & COMPANY, INC.
7300 FOLSOM BOULEVARD, SUITE 203
SACRAMENTO, CA 95826

GENERAL NOTES
LOAD AND RESISTANCE FACTOR DESIGN

DESIGN:
AASHTO LRFD Bridge Design Specifications, 8th edition with California Amendments

SEISMIC DESIGN:
Caltrans Seismic Design Criteria (SDC), Version 2.0 dated October 2017
April 2019

DEAD LOAD:
Includes 35 psf for future wearing surface. The deck load between the girders has been increased by a factor of 10% to allow for the use of steel deck forms.

LIVE LOADING:
HL93 and permit design load.

SEISMIC LOADING:
Soil Profile: Vs30 = 360 m/s (1200 ft/s)
Moment Magnitude: 6.8
Peak Ground Acceleration 0.23g
See ARS Curve

CONCRETE:
fy = 60 ksi
f'c = 3.6 ksi unless otherwise noted
n = 8
See "PRESTRESSING NOTES" on "GIRDER DETAILS NO. 1" sheet

PILE:
See "PILE DATA TABLE" on "FOUNDATION PLAN" sheet.

QUANTITIES

BRIDGE REMOVAL	X LS
STRUCTURE EXCAVATION (BRIDGE)	X CY
STRUCTURE BACKFILL (BRIDGE)	X CY
FURNISH PILING (CLASS 200) (ALTERNATIVE X)	X LF
DRIVE PILE (CLASS 200) (ALTERNATIVE X)	X EA
STRUCTURAL CONCRETE, BRIDGE FOOTING	X CY
STRUCTURAL CONCRETE, BRIDGE	X CY
STRUCTURAL CONCRETE, APPROACH SLAB (TYPE EQ)	X CY
FURNISH PRECAST PRESTRESSED CONCRETE BULB-TEE GIRDER (115')	X EA
ERECT PRECAST PRESTRESSED CONCRETE GIRDER	X EA
JOINT SEAL (MR 1 1/2")	X LF
BAR REINFORCING STEEL (BRIDGE)	X LB
HEADED BAR REINFORCEMENT	X EA
CALIFORNIA ST-75 BRIDGE RAIL	X LF
MISCELLANEOUS METAL (BRIDGE)	X LB

STANDARD PLANS DATED 2018

A3A-A3C	ABBREVIATIONS
A10A-A10E	LINES AND SYMBOLS
A10F-A10G	LEGEND - SOIL
A78F1	DOUBLE THRIE BEAM BARRIER - CONNECTIONS TO BRIDGE RAILINGS WITHOUT SIDEWALKS
A78F2	SINGLE THRIE BEAM BARRIER - CONNECTIONS TO BRIDGE RAILINGS WITHOUT SIDEWALKS
A62C	LIMITS OF PAYMENT FOR EXCAVATION AND BACKFILL - BRIDGE
RSP B0-1	BRIDGE DETAILS
B0-3	BRIDGE DETAILS
B0-5	BRIDGE DETAILS
B0-13	BRIDGE DETAILS
RSP B2-8	PILE DETAILS CLASS 200
B3-3A	RETAINING WALL TYPE 1A (CASE 1)
B6-21	JOINT SEALS (MAXIMUM MOVEMENT RATING = 2")
B9-4	STRUCTURE APPROACH TYPE EQ(10)
B9-5	STRUCTURE APPROACH SLAB DETAILS
B9-6	DRAINAGE DETAILS
T3A	TEMPORARY RAILING (TYPE K)

Standard Plan Sheet No.
Detail No.

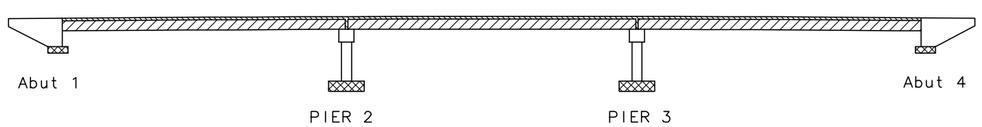

Structural Concrete, Bridge

PC P/S Concrete CA Wide Flange Girder, See "GIRDER DETAILS NO. 1" sheet for Strength

Structural Concrete, Bridge (f'c = 5.0 ksi @ 28 days)

Structural Concrete, Bridge Footing

CONCRETE STRENGTH AND TYPE LIMITS
NO SCALE

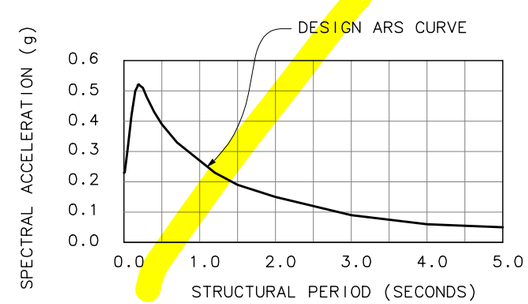

ARS CURVE
(5% DAMPING)

INDEX TO PLANS

SHEET NO.	TITLE
1	GENERAL PLAN
2	INDEX TO PLAN
3	DECK CONTOURS
4	FOUNDATION PLAN
5	ABUTMENT 1 LAYOUT
6	ABUTMENT 4 LAYOUT
7	ABUTMENT DETAILS No. 1
8	ABUTMENT DETAILS No. 2
9	PIER LAYOUT
10	PIER DETAILS
11	TYPICAL SECTION
12	GIRDER LAYOUT
13	GIRDER DETAILS NO. 1
14	GIRDER DETAILS NO. 2
15	GIRDER DETAILS NO. 3
16	GIRDER DETAILS NO. 4
17	CALIFORNIA ST-75 BRIDGE RAIL DETAILS No.1
18	CALIFORNIA ST-75 BRIDGE RAIL DETAILS No.2
19	CALIFORNIA ST-75 BRIDGE RAIL DETAILS No.3
20	CALIFORNIA ST-75 BRIDGE RAIL DETAILS No.4
21	ROCK SLOPE PROTECTION
22	LOG OF TEST BORINGS (1 OF 2)
23	LOG OF TEST BORINGS (2 OF 2)

DESIGN OVERSIGHT
SIGN OFF DATE

	BY	CHECKED
DESIGN	T. PHAM	Y. REN
DETAILS	G. BOYKO	T. PHAM
QUANTITIES	G. GUARDADO	N. FELDE

PREPARED FOR THE SACRAMENTO COUNTY DEPARTMENT OF TRANSPORTATION

JASON HICKEY
PROJECT ENGINEER

BRIDGE NO. 24C0606
POST MILES

LAGUNA CREEK BRIDGE (REPLACE)
INDEX TO PLAN

DESIGN DETAIL SHEET (ENGLISH) (REV.7/16/10)

ORIGINAL SCALE IN INCHES FOR REDUCED PLANS 0 1 2 3

UNIT: X
PROJECT NUMBER & PHASE: X

DISREGARD PRINTS BEARING EARLIER REVISION DATES

REVISION DATES (PRELIMINARY STAGE ONLY) 09/13/16 11/06/20

SHEET 2 OF 23

FILE => $REQUEST

CONTRACT NO.: X PROJECT ID:

USERNAME => $USER DATE PLOTTED => $DATE TIME PLOTTED => $TIME

V:\Sacramento Co-SA-13108-Alta Mesa Rd Bridge Replacement\CADD\Structures\02 AM_IP.dwg 10/29/2020 1:25 PM

DIST	COUNTY	ROUTE	POST MILES TOTAL PROJECT	SHEET No	TOTAL SHEETS
03	SAC				

REGISTERED CIVIL ENGINEER 11/6/20 DATE

PLANS APPROVAL DATE

REGISTERED PROFESSIONAL ENGINEER TRUONG VIET PHAM No. 81809 Exp. 3/31/22 CIVIL STATE OF CALIFORNIA

The State of California or its officers or agents shall not be responsible for the accuracy or completeness of scanned copies of this plan sheet.

SACRAMENTO COUNTY
411 BRANCH CENTER ROAD
SACRAMENTO, CA 95827

MARK THOMAS & COMPANY, INC.
7300 FOLSOM BOULEVARD, SUITE 203
SACRAMENTO, CA 95826

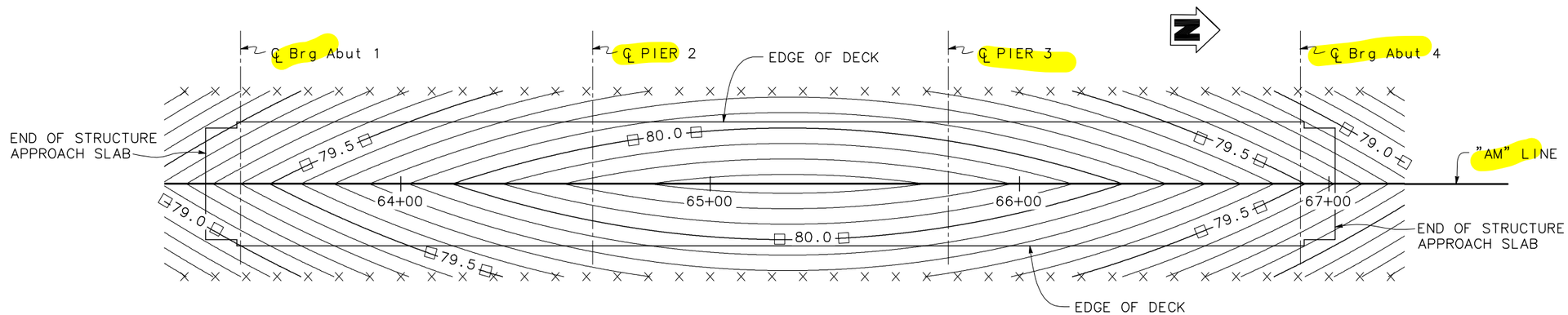

DECK CONTOURS

1" = 20'

NOTES:

1. Contour interval is 0.1 feet.
2. Contours do not include camber settlement.
3. × – Indicates 10 foot intervals.
4. □ – Indicates half foot contour.

DESIGN	BY T. PHAM	CHECKED Y. REN	
DETAILS	BY G. BOYKO	CHECKED T. PHAM	
QUANTITIES	BY G. GUARDADO	CHECKED N. FELDE	

DESIGN OVERSIGHT

SIGN OFF DATE

DESIGN DETAIL SHEET (ENGLISH) (REV.7/16/10)

ORIGINAL SCALE IN INCHES FOR REDUCED PLANS 0 1 2 3

PREPARED FOR THE SACRAMENTO COUNTY DEPARTMENT OF TRANSPORTATION

JASON HICKEY
PROJECT ENGINEER

UNIT: X
PROJECT NUMBER & PHASE: X

BRIDGE NO. 24C0606
POST MILES

LAGUNA CREEK BRIDGE (REPLACE)

DECK CONTOURS

DISREGARD PRINTS BEARING EARLIER REVISION DATES

REVISION DATES (PRELIMINARY STAGE ONLY) 11/04/13 12/13/13 03/20/14 04/03/14 05/02/14 05/19/15 07/29/16 09/13/16 11/06/20

SHEET 3 OF 23

CONTRACT NO.: X PROJECT ID:

FILE => $REQUEST

V:\Sacramento Co-SA-13108-Alta Mesa Rd Bridge Replacement\CADD\Structures\03 AM_DC.dwg 10/27/2020 2:52 PM

USERNAME => $USER DATE PLOTTED => $DATE TIME PLOTTED => $TIME

DIST	COUNTY	ROUTE	POST MILES TOTAL PROJECT	SHEET No	TOTAL SHEETS
03	SAC				

REGISTERED STRUCTURAL ENGINEER — DATE 11/6/20

PLANS APPROVAL DATE

REGISTERED PROFESSIONAL ENGINEER — TRUONG VIET PHAM — No. 81809 — Exp. 3/31/22 — CIVIL — STATE OF CALIFORNIA

The State of California or its officers or agents shall not be responsible for the accuracy or completeness of scanned copies of this plan sheet.

SACRAMENTO COUNTY
411 BRANCH CENTER ROAD
SACRAMENTO, CA 95827

MARK THOMAS & COMPANY, INC.
7300 FOLSOM BOULEVARD, SUITE 203
SACRAMENTO, CA 95826

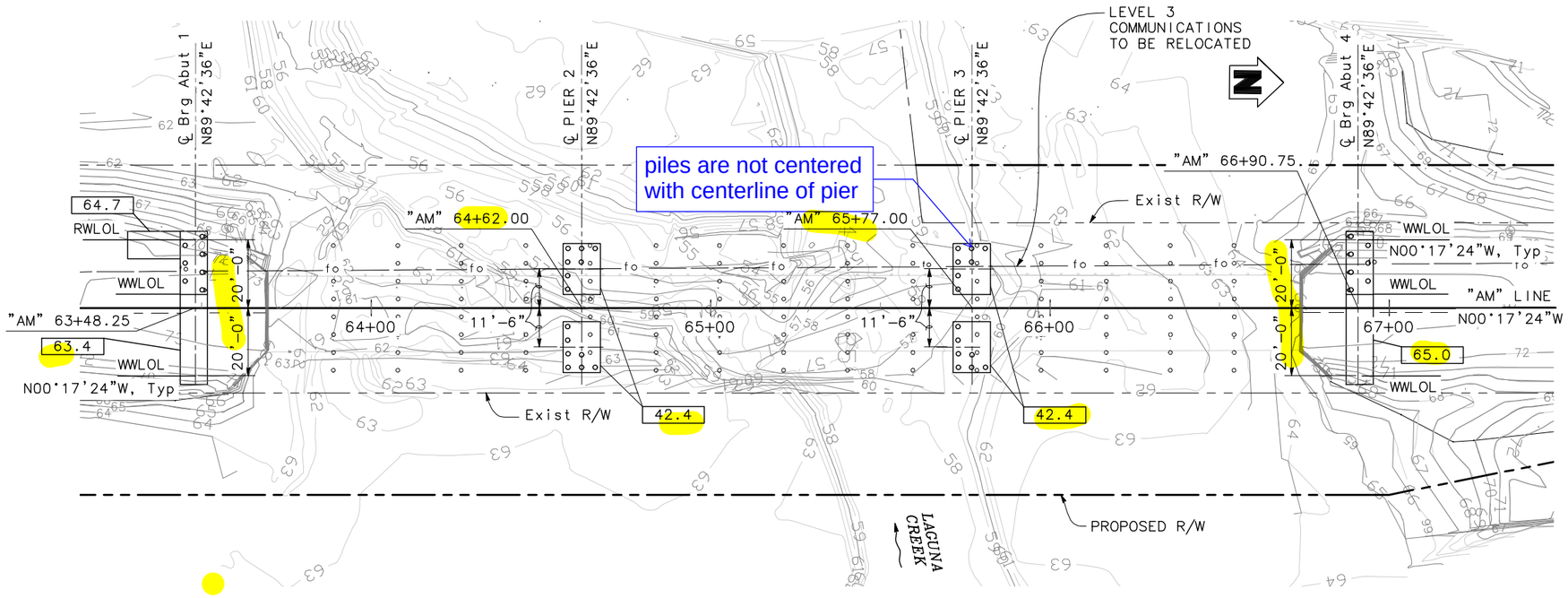

PLAN
1" = 20'

BENCHMARK:

Bronze tablet set in concrete stamped "U.S.C & G.S. B.M. U-953, 1962" located 22 feet East of center Alta Messa Rd and 12 feet South of the extended centerline of Langford Rd, and 3 feet East of a guy pole, 4 feet West of fence, 1.5 feet North of metal witness post and 0.45 Mi North of Laguna Creek.

Elevation 78.86 feet (NAVD88)

LEGEND:

- Indicates Bottom of Footing Elevation (feet)
- ∘ OR ∘ Indicates Driven Pile (all piles not shown)
- ∘ Indicates Exist Pile Extension

PILE DATA TABLE

RSP B2-8

Location	Pile Type	Nominal Resistance (kips)		Design Tip Elevations (ft)	Specified Tip Elevations (ft)	Nominal Driving Resistance (kips)
		Compression	Tension			
Abut 1	CLASS 200 Alt "W"	360	N/A	22.0(a), 37.0(d)	22.0	360
PIER 2	CLASS 200 Alt "W"	310	120	1.0(a), 9.0(b), 16.0(d)	1.0	310
PIER 3	CLASS 200 Alt "W"	310	120	1.0(a), 9.0(b), 16.0(d)	1.0	310
Abut 4	CLASS 200 Alt "W"	360	N/A	22.0(a), 38.0(d)	22.0	360

NOTES:
1. Design tip elevations are controlled by (a) Compression, (b) Tension (d) Lateral
2. Do not raise specified tip elevation.

SCOUR DATA TABLE

Location	Long Term (Degradation and Contraction) Scour Elevation (ft)	Short Term (Local) Scour Depth (ft)
Abut 1	69.0	5.6
PIER 2	51.0	7.7
PIER 3	51.0	8.6
Abut 4	69.0	3.6

HYDROLOGIC SUMMARY

Drainage Area 114.9 Square Mile

	Design Flood	Base Flood	Overtopping Flood
Frequency (Years)	50	100	N/A
Discharge (Cubic Foot per Sec)	15,750	18,260	N/A
Water Surface (Elevation at Bridge)	70.2	70.6	N/A

Flood plain data are based upon information available when the plans were prepared and are shown to meet federal requirements. The accuracy of said information is not warranted by the County and interested or affected parties should make their own investigation.

Hydrologic/ Hydraulic Study Elevation was based on NAVD88.

NOTE:
THE CONTRACTOR SHALL VERIFY ALL CONTROLLING FIELD DIMENSIONS BEFORE ORDERING OR FABRICATING ANY MATERIAL.

95% SUBMITTAL

GEOTECHNICAL PROFESSIONAL

DESIGN OVERSIGHT

SIGN OFF DATE

SCALE: No Scale | VERT.DATUM: NGVD88 | HORZ.DATUM:
PHOTOGRAMMETRY AS OF: | ALIGNMENT TIES
SURVEYED | BY T. BEALE | DRAFTED | BY
FIELD CHECKED | BY B. BARROWMAN | CHECKED | BY

	BY	CHECKED
DESIGN	T. PHAM	Y. REN
DETAILS	G. BOYKO	T. PHAM
QUANTITIES	C. GUARDADO	N. FELDE

PREPARED FOR THE SACRAMENTO COUNTY DEPARTMENT OF TRANSPORTATION

JASON HICKEY
PROJECT ENGINEER

BRIDGE NO. 24C0606
POST MILES

LAGUNA CREEK BRIDGE (REPLACE)
FOUNDATION PLAN

FOUNDATION PLAN SHEET (ENGLISH) (REV.7/16/10)

ORIGINAL SCALE IN INCHES FOR REDUCED PLANS 0 1 2 3

UNIT:
PROJECT NUMBER & PHASE:

DISREGARD PRINTS BEARING EARLIER REVISION DATES

REVISION DATES (PRELIMINARY STAGE ONLY): 11/28/13 11/06/20 04/28/14 04/29/14 12/02/14 05/19/15 06/19/15 08/06/16 09/13/16

SHEET 4 OF 23

FILE => $REQUEST
CONTRACT NO.:
PROJECT ID:

USERNAME => GBOYKO
DATE PLOTTED =>

V:\Sacramento Co-SA-13108-Alta Mesa Rd Bridge Replacement\CADD\Structures\04 AM_FP.dwg 10/29/2020 6:10 PM

DIST	COUNTY	ROUTE	POST MILES TOTAL PROJECT	SHEET No	TOTAL SHEETS
03	SAC				

REGISTERED CIVIL ENGINEER — DATE 11/6/20

PLANS APPROVAL DATE

REGISTERED PROFESSIONAL ENGINEER — TRUONG VIET PHAM — No. 81809 — Exp. 3/31/22 — CIVIL — STATE OF CALIFORNIA

The State of California or its officers or agents shall not be responsible for the accuracy or completeness of scanned copies of this plan sheet.

SACRAMENTO COUNTY
411 BRANCH CENTER ROAD
SACRAMENTO, CA 95827

MARK THOMAS & COMPANY, INC.
7300 FOLSOM BOULEVARD, SUITE 203
SACRAMENTO, CA 95826

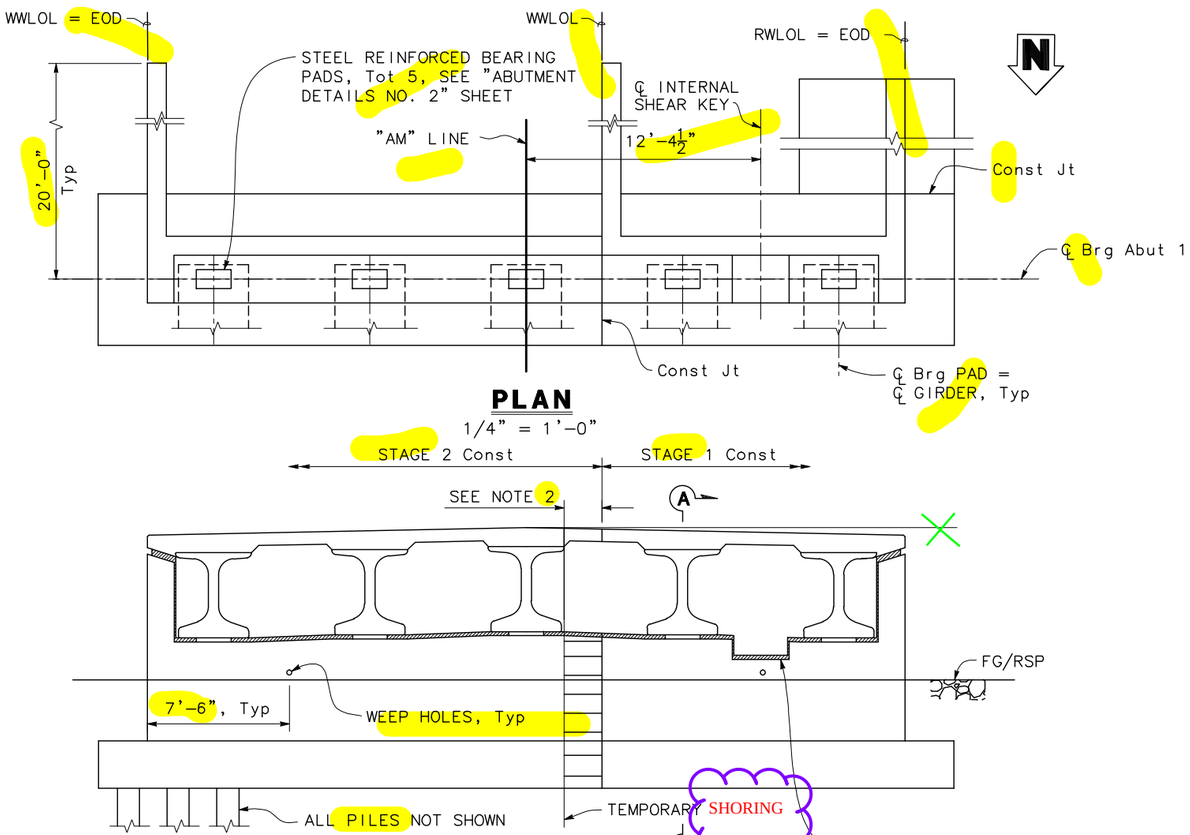

PLAN
1/4" = 1'-0"

ELEVATION
1/4" = 1'-0"

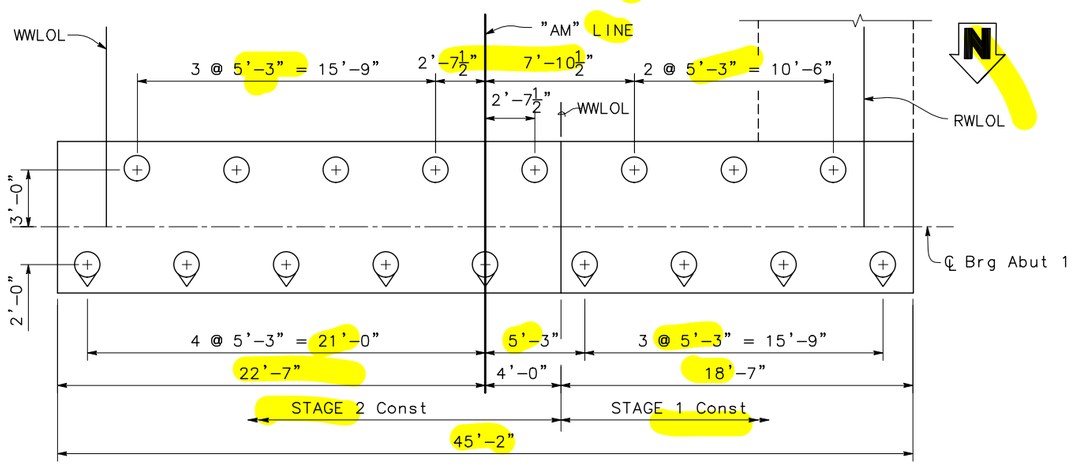

FOOTING PLAN
1/4" = 1'-0"

NOTE:
THE CONTRACTOR SHALL VERIFY ALL CONTROLLING FIELD DIMENSIONS BEFORE ORDERING OR FABRICATING ANY MATERIAL.

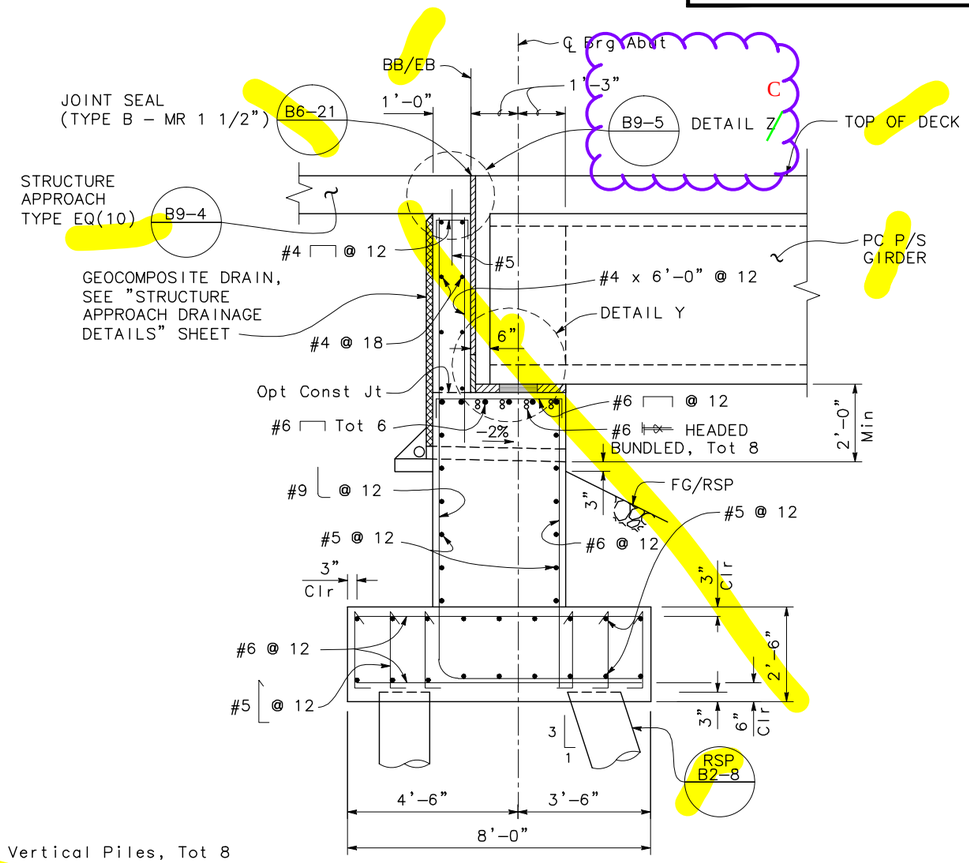

SECTION A-A
1/2" = 1'-0"

LEGEND:
⊕ Indicates Vertical Piles, Tot 8
⊕ Indicates Battered Piles, Tot 9

NOTES:
1. For "DETAIL Y" ~~AND "DETAIL Z"~~, see "ABUTMENT DETAILS NO. 2" sheet.
2. Extend footing and abutment reinforcement 2'-0" beyond construction joint to lap with stage 2 construction. Reinforcement may be bent as necessary.
3. For Abut 1 West Retaining Wall details, see "ABUTMENT DETAILS NO. 1" sheet.

DESIGN	BY T. PHAM	CHECKED Y. REN	
DETAILS	BY G. BOYKO	CHECKED T. PHAM	
QUANTITIES	BY G. GUARDADO	CHECKED N. FELDE	

DESIGN OVERSIGHT
SIGN OFF DATE

PREPARED FOR THE SACRAMENTO COUNTY DEPARTMENT OF TRANSPORTATION

JASON HICKEY
PROJECT ENGINEER

BRIDGE NO. 24C0606
POST MILES

LAGUNA CREEK BRIDGE (REPLACE)
ABUTMENT 1 LAYOUT

DESIGN DETAIL SHEET (ENGLISH) (REV.7/16/10)

ORIGINAL SCALE IN INCHES FOR REDUCED PLANS 0 1 2 3

UNIT: X
PROJECT NUMBER & PHASE: X

DISREGARD PRINTS BEARING EARLIER REVISION DATES

REVISION DATES (PRELIMINARY STAGE ONLY): 11/28/13 04/09/14 04/22/14 04/28/14 12/02/14 06/23/15 08/18/16 09/13/16 11/06/20

SHEET 5 OF 23

CONTRACT NO.: X PROJECT ID:

FILE => $REQUEST

USERNAME => $USER DATE PLOTTED => $DATE TIME PLOTTED => $TIME

V:\Sacramento Co-SA-13108-Alta Mesa Rd Bridge Replacement\CADD\Structures\05-08 AM_AL.dwg 10/27/2020 5:26 PM

DIST	COUNTY	ROUTE	POST MILES TOTAL PROJECT	SHEET No	TOTAL SHEETS
03	SAC				

REGISTERED CIVIL ENGINEER — DATE 11/6/20

PLANS APPROVAL DATE

REGISTERED PROFESSIONAL ENGINEER — TRUONG VIET PHAM — No. 81809 — Exp. 3/31/22 — CIVIL — STATE OF CALIFORNIA

The State of California or its officers or agents shall not be responsible for the accuracy or completeness of scanned copies of this plan sheet.

SACRAMENTO COUNTY
411 BRANCH CENTER ROAD
SACRAMENTO, CA 95827

MARK THOMAS & COMPANY, INC.
7300 FOLSOM BOULEVARD, SUITE 203
SACRAMENTO, CA 95826

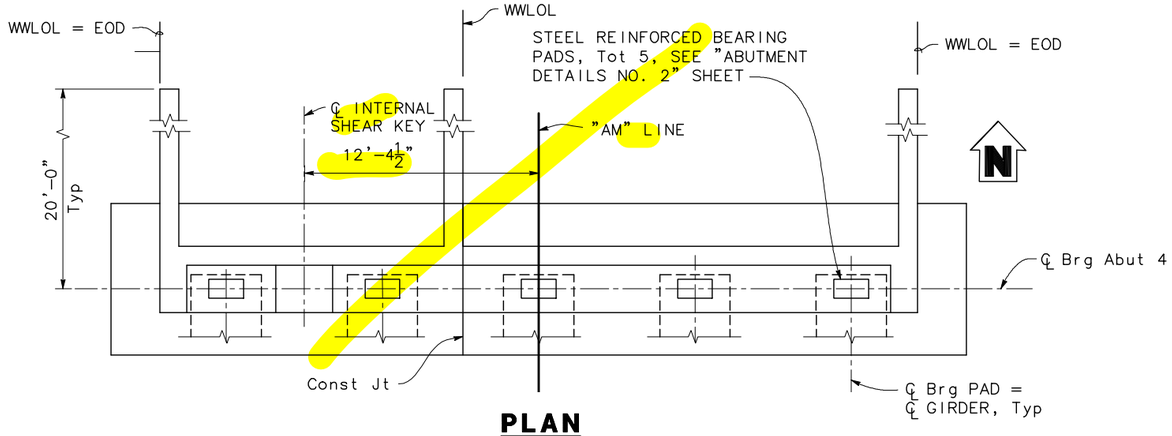

PLAN
1/4" = 1'-0"

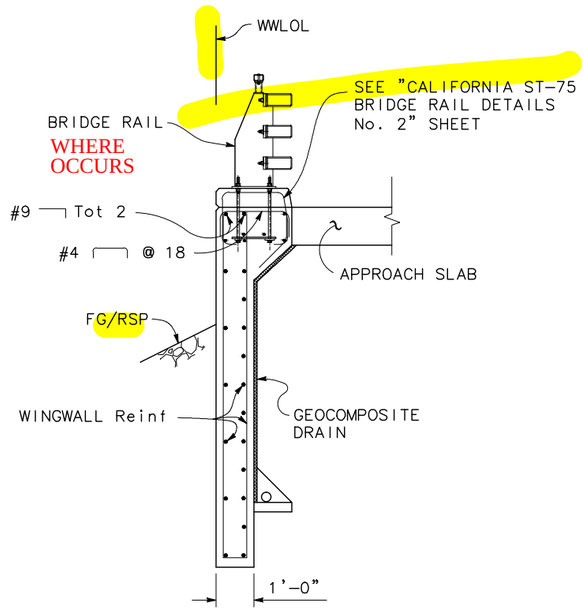

SECTION B-B
1/2" = 1'-0"

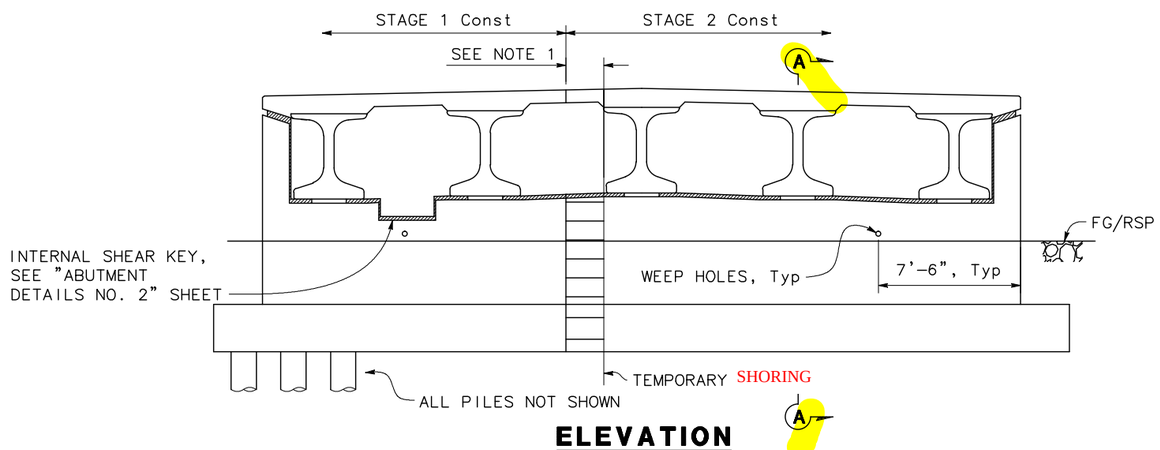

ELEVATION
1/4" = 1'-0"

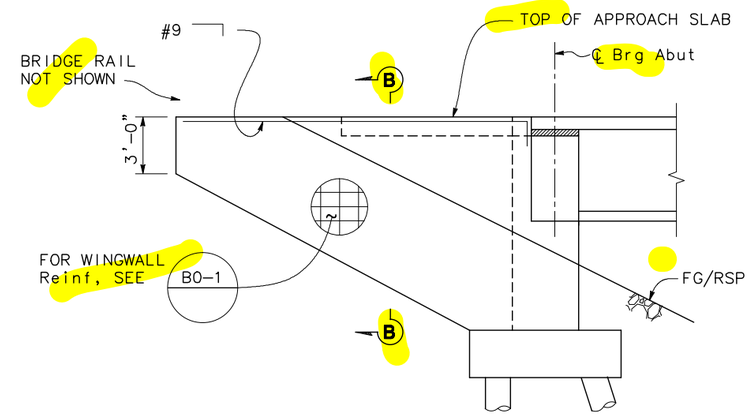

WINGWALL ELEVATION
1/4" = 1'-0"

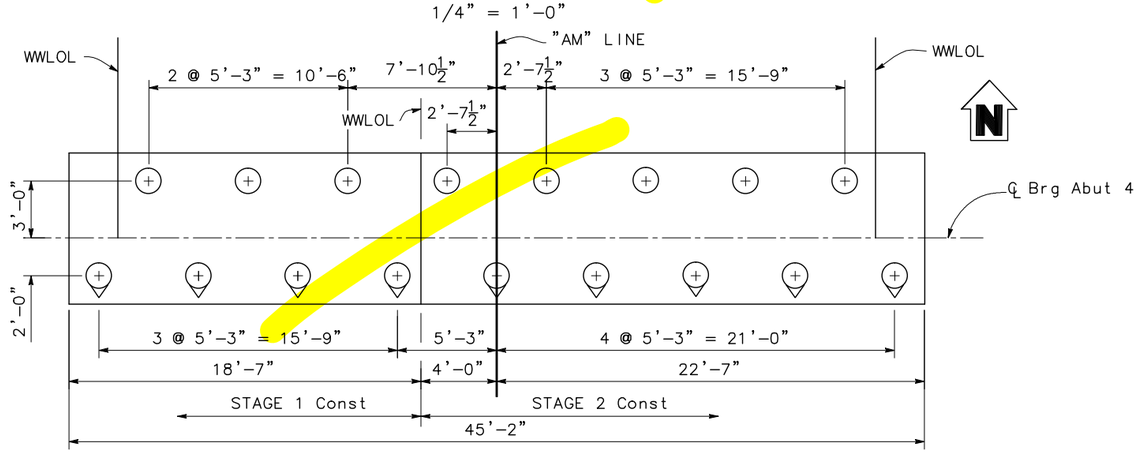

FOOTING PLAN
1/4" = 1'-0"

LEGEND:

⊕ Indicates Vertical Piles, Tot 8

⊕ Indicates Battered Piles, Tot 9

NOTES:

1. Extend footing and abutment reinforcement 2'-0" beyond construction joint to lap with stage 2 construction. Reinforcement may be bent as necessary.
2. For "SECTION A-A", see "ABUTMENT 1 LAYOUT" SHEET

NOTE:
THE CONTRACTOR SHALL VERIFY ALL CONTROLLING FIELD DIMENSIONS BEFORE ORDERING OR FABRICATING ANY MATERIAL.

DESIGN	BY T. PHAM	CHECKED Y. REN	
DETAILS	BY G. BOYKO	CHECKED T. PHAM	
QUANTITIES	BY G. GUARDADO	CHECKED N. FELDE	

DESIGN OVERSIGHT

SIGN OFF DATE

PREPARED FOR THE SACRAMENTO COUNTY DEPARTMENT OF TRANSPORTATION

JASON HICKEY
PROJECT ENGINEER

BRIDGE NO. 24C0606
POST MILES

LAGUNA CREEK BRIDGE (REPLACE)
ABUTMENT 4 LAYOUT

DESIGN DETAIL SHEET (ENGLISH) (REV.7/16/10)

ORIGINAL SCALE IN INCHES FOR REDUCED PLANS 0 1 2 3

UNIT: X
PROJECT NUMBER & PHASE: X

DISREGARD PRINTS BEARING EARLIER REVISION DATES

REVISION DATES (PRELIMINARY STAGE ONLY): 08/08/16 09/13/16 11/06/20

SHEET 6 OF 23

CONTRACT NO.: X PROJECT ID:

FILE => $REQUEST

V:\Sacramento Co-SA-13108-Alta Mesa Rd Bridge Replacement\CADD\Structures\05-08 AM_AL.dwg 10/29/2020 12:09 PM

USERNAME => $USER DATE PLOTTED => $DATE TIME PLOTTED => $TIME

DIST	COUNTY	ROUTE	POST MILES TOTAL PROJECT	SHEET No	TOTAL SHEETS
03	SAC				

REGISTERED CIVIL ENGINEER 11/6/20 DATE

PLANS APPROVAL DATE

REGISTERED PROFESSIONAL ENGINEER TRUONG VIET PHAM No. 81809 Exp. 3/31/22 CIVIL STATE OF CALIFORNIA

The State of California or its officers or agents shall not be responsible for the accuracy or completeness of scanned copies of this plan sheet.

SACRAMENTO COUNTY
411 BRANCH CENTER ROAD
SACRAMENTO, CA 95827

MARK THOMAS & COMPANY, INC.
7300 FOLSOM BOULEVARD, SUITE 203
SACRAMENTO, CA 95826

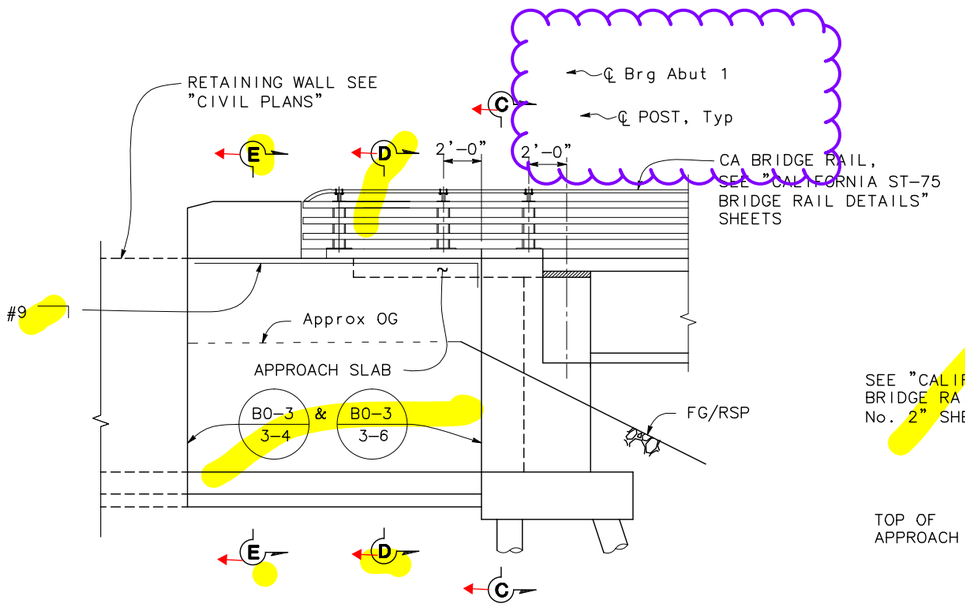

Abut 1 WEST RETAINING WALL - MIRRORED ELEVATION

1/4" = 1'-0"

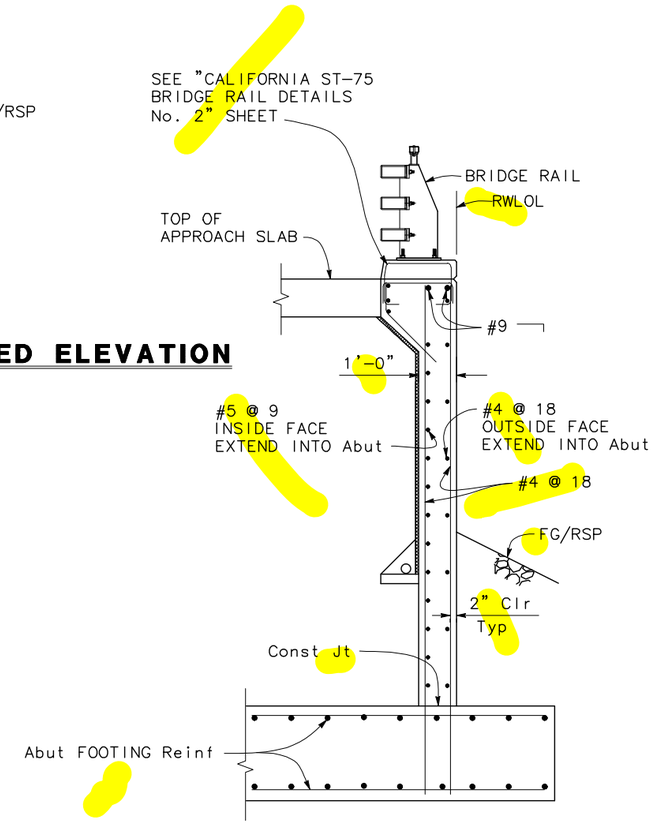

SECTION C-C

1/2" = 1'-0"

~~For details and reinforcement not shown, see RSP B11-77~~

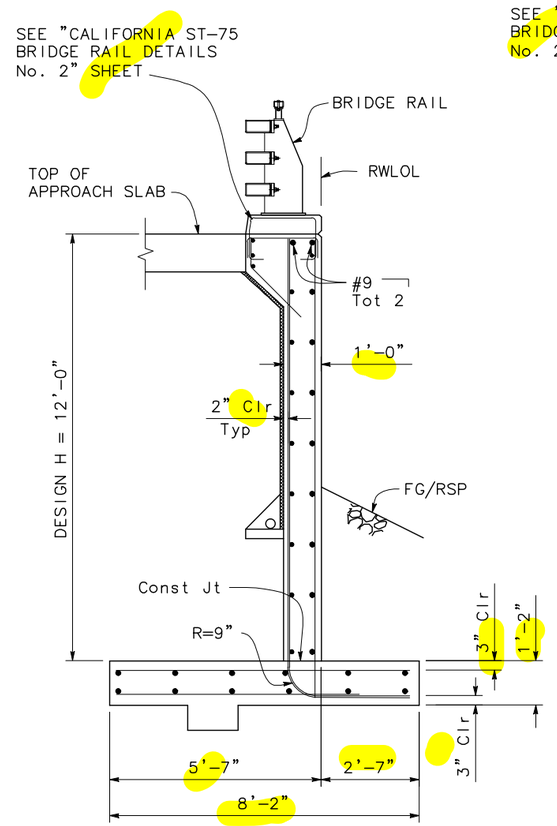

SECTION D-D (B3-3A)

1/2" = 1'-0"

For details and reinforcement not shown, see RSP B3-3A ~~and RSP B11-77~~

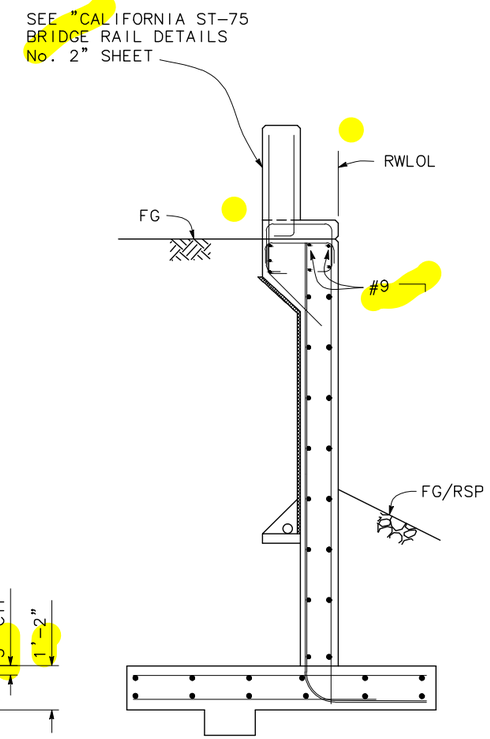

SECTION E-E

1/2" = 1'-0"

See "SECTION D-D" for information not shown

NOTE:
THE CONTRACTOR SHALL VERIFY ALL CONTROLLING FIELD DIMENSIONS BEFORE ORDERING OR FABRICATING ANY MATERIAL.

DESIGN	BY T. PHAM	CHECKED Y. REN		
DETAILS	BY G. BOYKO	CHECKED T. PHAM		
QUANTITIES	BY G. GUARDADO	CHECKED N. FELDE		

DESIGN OVERSIGHT

SIGN OFF DATE

PREPARED FOR THE SACRAMENTO COUNTY DEPARTMENT OF TRANSPORTATION

JASON HICKEY
PROJECT ENGINEER

BRIDGE NO. 24C0606
POST MILES

LAGUNA CREEK BRIDGE (REPLACE)
ABUTMENT DETAILS NO. 1

DESIGN DETAIL SHEET (ENGLISH) (REV.7/16/10)

ORIGINAL SCALE IN INCHES FOR REDUCED PLANS 0 1 2 3

UNIT: X
PROJECT NUMBER & PHASE: X

DISREGARD PRINTS BEARING EARLIER REVISION DATES

REVISION DATES (PRELIMINARY STAGE ONLY) 08/08/16 09/13/16 11/06/20

SHEET 7 OF 23

FILE => $REQUEST

CONTRACT NO.: X

PROJECT ID:

V:\Sacramento Co-SA-13108-Alta Mesa Rd Bridge Replacement\CADD\Structures\05-08 AM_AL.dwg 10/29/2020 1:35 PM

TIME PLOTTED => $TIME

DATE PLOTTED => $DATE

USERNAME => $USER

DIST	COUNTY	ROUTE	POST MILES TOTAL PROJECT	SHEET No	TOTAL SHEETS
03	SAC				

REGISTERED CIVIL ENGINEER 11/6/20 DATE

PLANS APPROVAL DATE

REGISTERED PROFESSIONAL ENGINEER TRUONG VIET PHAM No. 81809 Exp. 3/31/22 CIVIL STATE OF CALIFORNIA

The State of California or its officers or agents shall not be responsible for the accuracy or completeness of scanned copies of this plan sheet.

SACRAMENTO COUNTY
411 BRANCH CENTER ROAD
SACRAMENTO, CA 95827

MARK THOMAS & COMPANY, INC.
7300 FOLSOM BOULEVARD, SUITE 203
SACRAMENTO, CA 95826

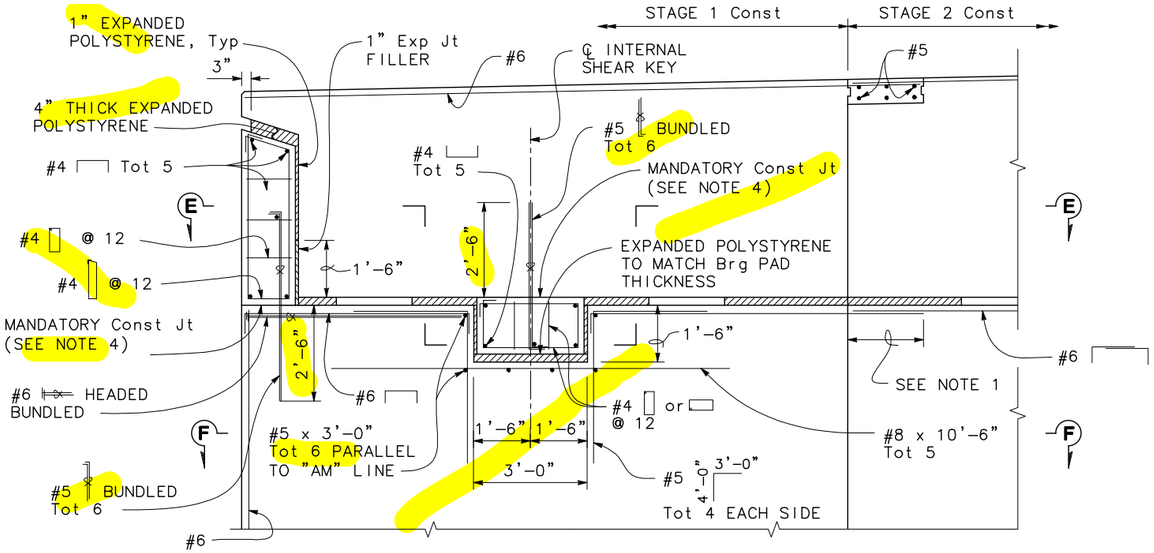

SHEAR KEY ELEVATION

1/2" = 1'-0"

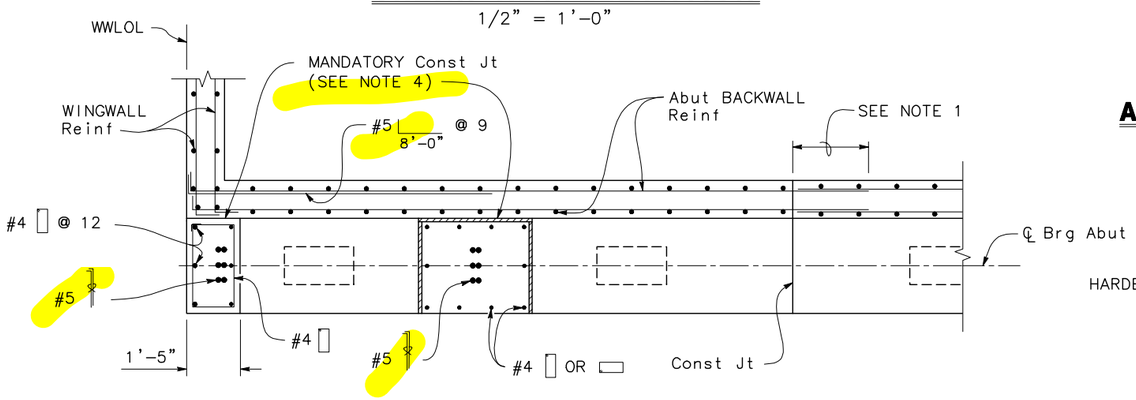

SECTION E-E

1/2" = 1'-0"

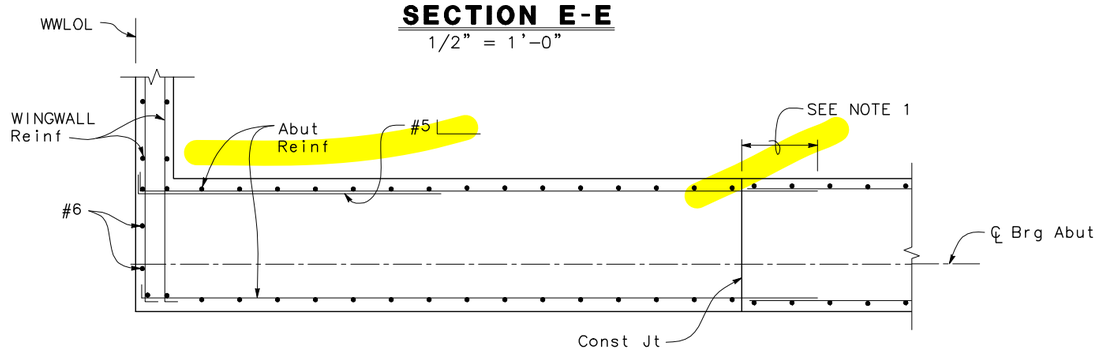

SECTION F-F

1/2" = 1'-0"

NOTE:
THE CONTRACTOR SHALL VERIFY ALL CONTROLLING FIELD DIMENSIONS BEFORE ORDERING OR FABRICATING ANY MATERIAL.

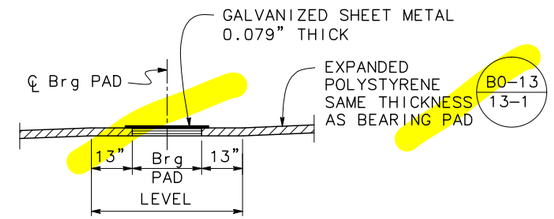

ELEVATION

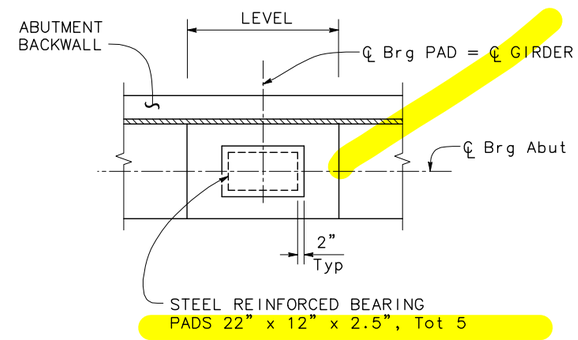

PLAN

ABUTMENT BEARING PAD DETAILS

1/2" = 1'-0"

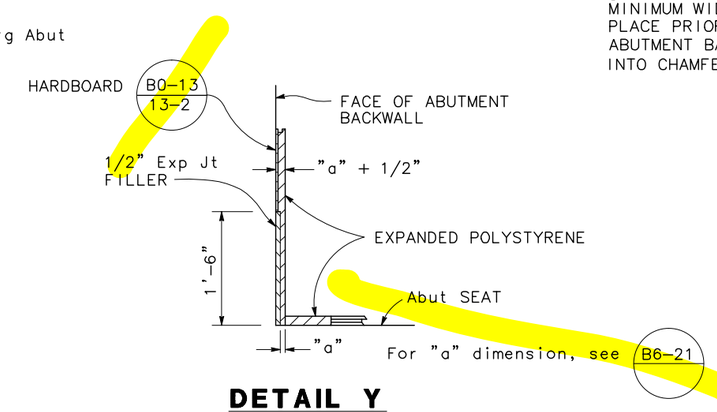

DETAIL Y

1" = 1'-0"

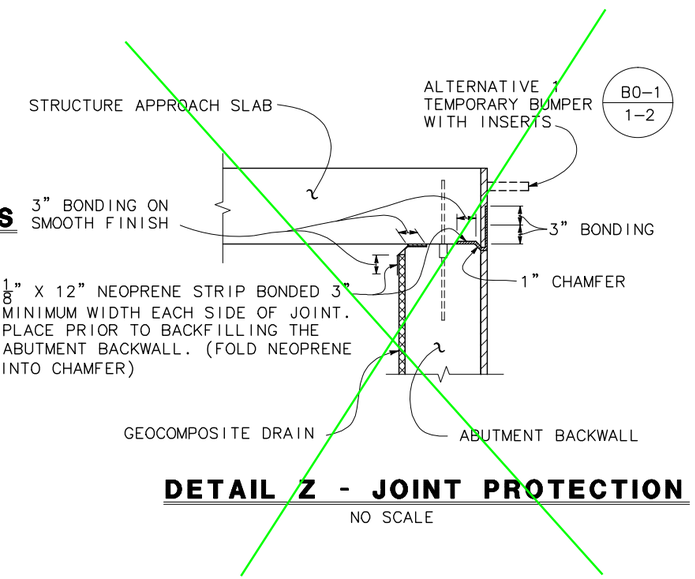

DETAIL Z - JOINT PROTECTION

NO SCALE

NOTES:

1. Extend footing and abutment reinforcement 2'-0" beyond construction joint to lap with stage 2 construction. Reinforcement may be bent as necessary.
2. For locations of "DETAIL Y" ~~and "DETAIL Z"~~, see "ABUTMENT 1 LAYOUT" sheet.
3. For diaphragm reinforcement details, see "GIRDER DETAILS NO. 3" sheet.
4. Mandatory construction joint shall be smooth finished and lined with 15 pound building paper.

DESIGN	BY T. PHAM	CHECKED Y. REN	
DETAILS	BY G. BOYKO	CHECKED T. PHAM	
QUANTITIES	BY G. GUARDADO	CHECKED N. FELDE	

DESIGN OVERSIGHT

SIGN OFF DATE

PREPARED FOR THE SACRAMENTO COUNTY DEPARTMENT OF TRANSPORTATION

JASON HICKEY
PROJECT ENGINEER

BRIDGE NO. 24C0606

POST MILES

LAGUNA CREEK BRIDGE (REPLACE)

ABUTMENT DETAILS NO. 2

DESIGN DETAIL SHEET (ENGLISH) (REV.7/16/10)

ORIGINAL SCALE IN INCHES FOR REDUCED PLANS 0 1 2 3

UNIT: X
PROJECT NUMBER & PHASE: X

DISREGARD PRINTS BEARING EARLIER REVISION DATES

REVISION DATES (PRELIMINARY STAGE ONLY) 11/28/13 04/28/14 05/28/14 12/02/14 06/23/15 08/05/16 09/13/16 11/06/20

SHEET 8 OF 23

CONTRACT NO.: X PROJECT ID:

FILE => $REQUEST

USERNAME => $USER DATE PLOTTED => $DATE TIME PLOTTED => $TIME

V:\Sacramento Co-SA-13108-Alta Mesa Rd Bridge Replacement\CADD\Structures\05-08 AM_AL.dwg 10/27/2020 5:42 PM

DIST	COUNTY	ROUTE	POST MILES TOTAL PROJECT	SHEET No	TOTAL SHEETS
03	SAC				

REGISTERED CIVIL ENGINEER — DATE 11/6/20

PLANS APPROVAL DATE

REGISTERED PROFESSIONAL ENGINEER — TRUONG VIET PHAM — No. 81809 — Exp. 3/31/22 — CIVIL — STATE OF CALIFORNIA

The State of California or its officers or agents shall not be responsible for the accuracy or completeness of scanned copies of this plan sheet.

SACRAMENTO COUNTY
411 BRANCH CENTER ROAD
SACRAMENTO, CA 95827

MARK THOMAS & COMPANY, INC.
7300 FOLSOM BOULEVARD, SUITE 203
SACRAMENTO, CA 95826

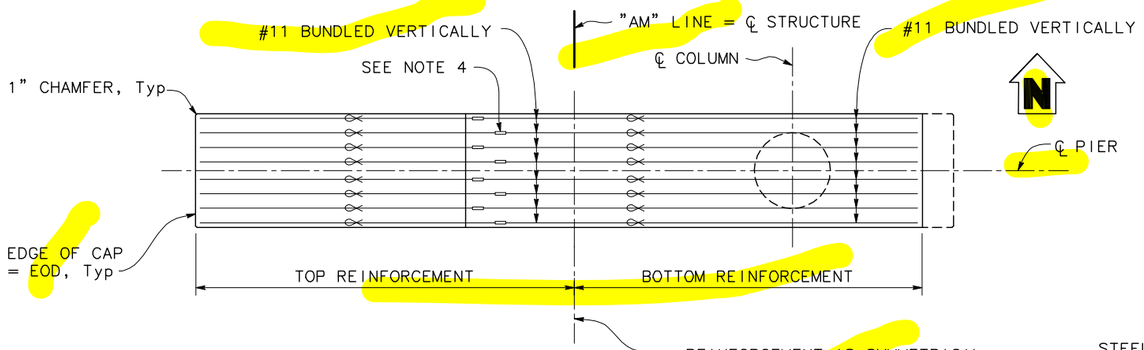

PLAN
1/4" = 1'-0"

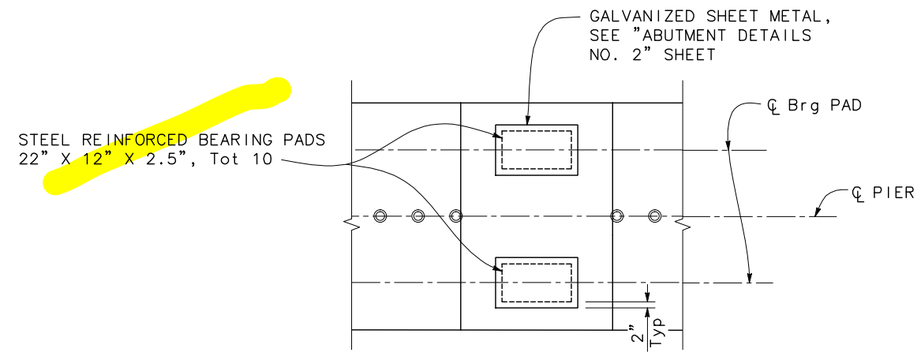

PIER BEARING PAD DETAILS
1/2" = 1'-0"

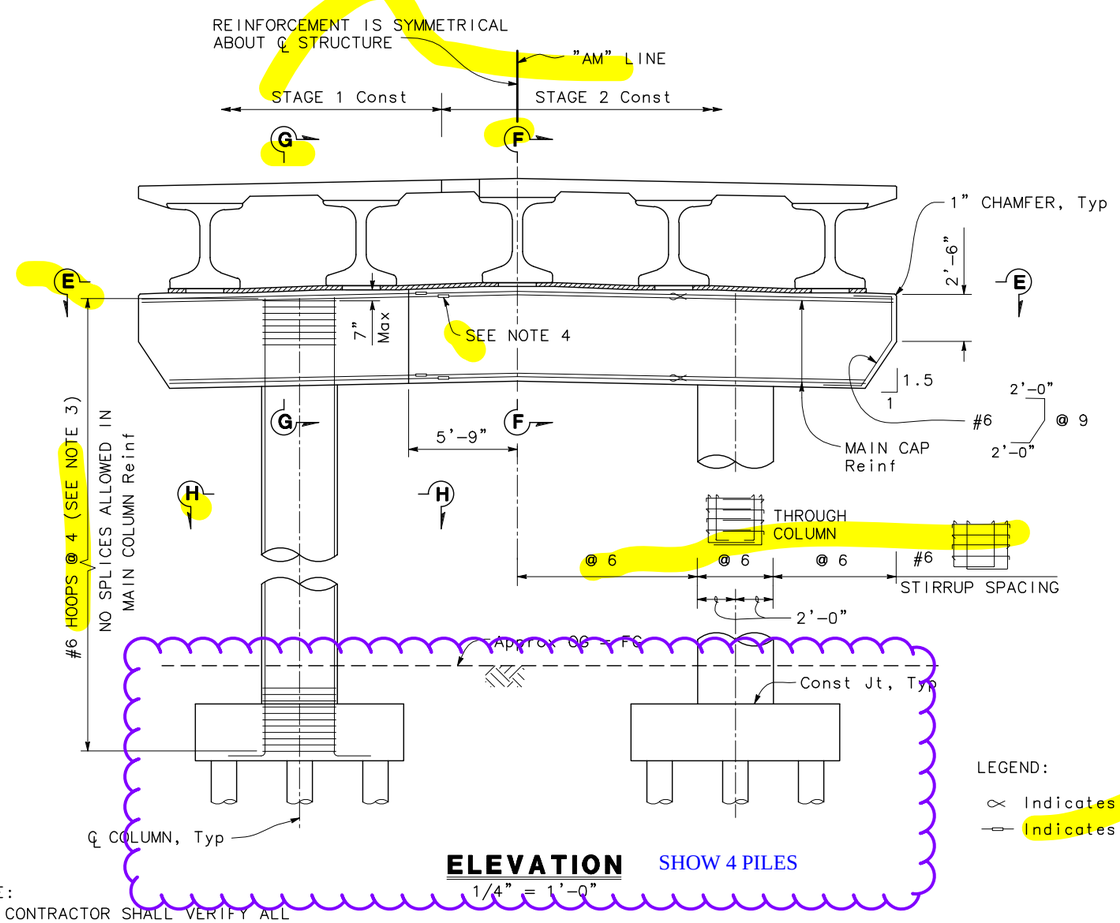

ELEVATION
SHOW 4 PILES
1/4" = 1'-0"

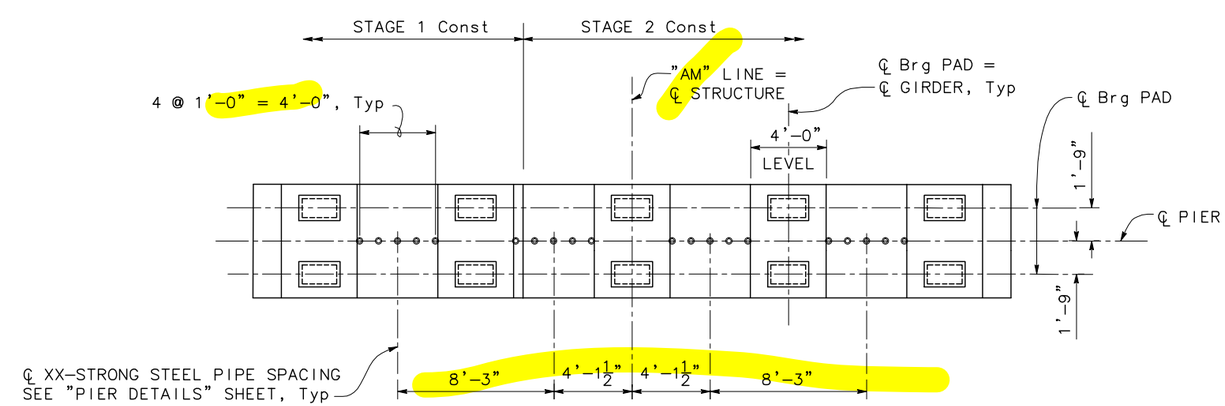

SECTION E-E
1/4" = 1'-0"

LEGEND:

∝ Indicates bundled bars

—⊟— Indicates mechanical splice

NOTES:
1. For "SECTION F-F", "SECTION G-G" and "SECTION H-H", see "PIER DETAILS" sheet.
2. Pier 2 shown, Pier 3 similar.
3. Hoops shall be ultimate spliced.
4. Mechanical splice, stagger top, bottom and abjecent bars.

NOTE:
THE CONTRACTOR SHALL VERIFY ALL CONTROLLING FIELD DIMENSIONS BEFORE ORDERING OR FABRICATING ANY MATERIAL.

DESIGN	BY T. PHAM	CHECKED Y. REN	
DETAILS	BY G. BOYKO	CHECKED T. PHAM	
QUANTITIES	BY G. GUARDADO	CHECKED N. FELDE	

DESIGN OVERSIGHT

SIGN OFF DATE

DESIGN DETAIL SHEET (ENGLISH) (REV.7/16/10)

ORIGINAL SCALE IN INCHES FOR REDUCED PLANS 0 1 2 3

PREPARED FOR THE SACRAMENTO COUNTY DEPARTMENT OF TRANSPORTATION

JASON HICKEY
PROJECT ENGINEER

UNIT: X
PROJECT NUMBER & PHASE: X

BRIDGE NO. 24C0606
POST MILES

LAGUNA CREEK BRIDGE (REPLACE)
PIER LAYOUT

DISREGARD PRINTS BEARING EARLIER REVISION DATES

REVISION DATES (PRELIMINARY STAGE ONLY): 11/28/13 03/24/14 04/23/14 05/07/14 12/02/14 05/08/15 07/28/16 08/31/16 09/13/16 11/06/20

SHEET 9 OF 23

CONTRACT NO.: X PROJECT ID:

FILE => $REQUEST

USERNAME => $USER DATE PLOTTED => $DATE TIME PLOTTED => $TIME

V:\Sacramento Co-SA-13108-Alta Mesa Rd Bridge Replacement\CADD\Structures\09-10 AM_PL.dwg 10/29/2020 6:21 PM

DIST	COUNTY	ROUTE	POST MILES TOTAL PROJECT	SHEET No	TOTAL SHEETS
03	SAC				

REGISTERED CIVIL ENGINEER 11/6/20 DATE

PLANS APPROVAL DATE

REGISTERED PROFESSIONAL ENGINEER TRUONG VIET PHAM No. 81809 Exp. 3/31/22 CIVIL STATE OF CALIFORNIA

The State of California or its officers or agents shall not be responsible for the accuracy or completeness of scanned copies of this plan sheet.

SACRAMENTO COUNTY
411 BRANCH CENTER ROAD
SACRAMENTO, CA 95827

MARK THOMAS & COMPANY, INC.
7300 FOLSOM BOULEVARD, SUITE 203
SACRAMENTO, CA 95826

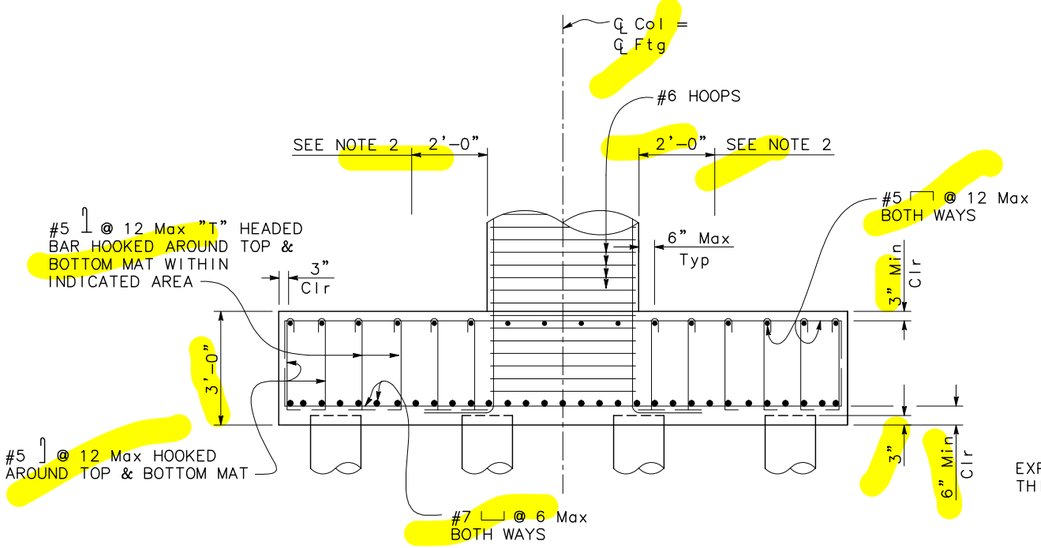

FOOTING ELEVATION
1/2" = 1'-0"

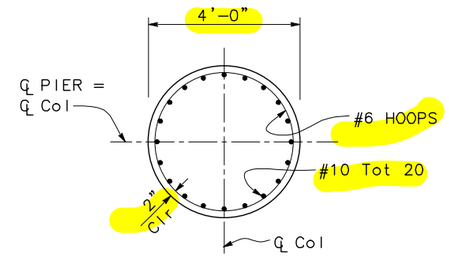

SECTION H-H
1/2" = 1'-0"

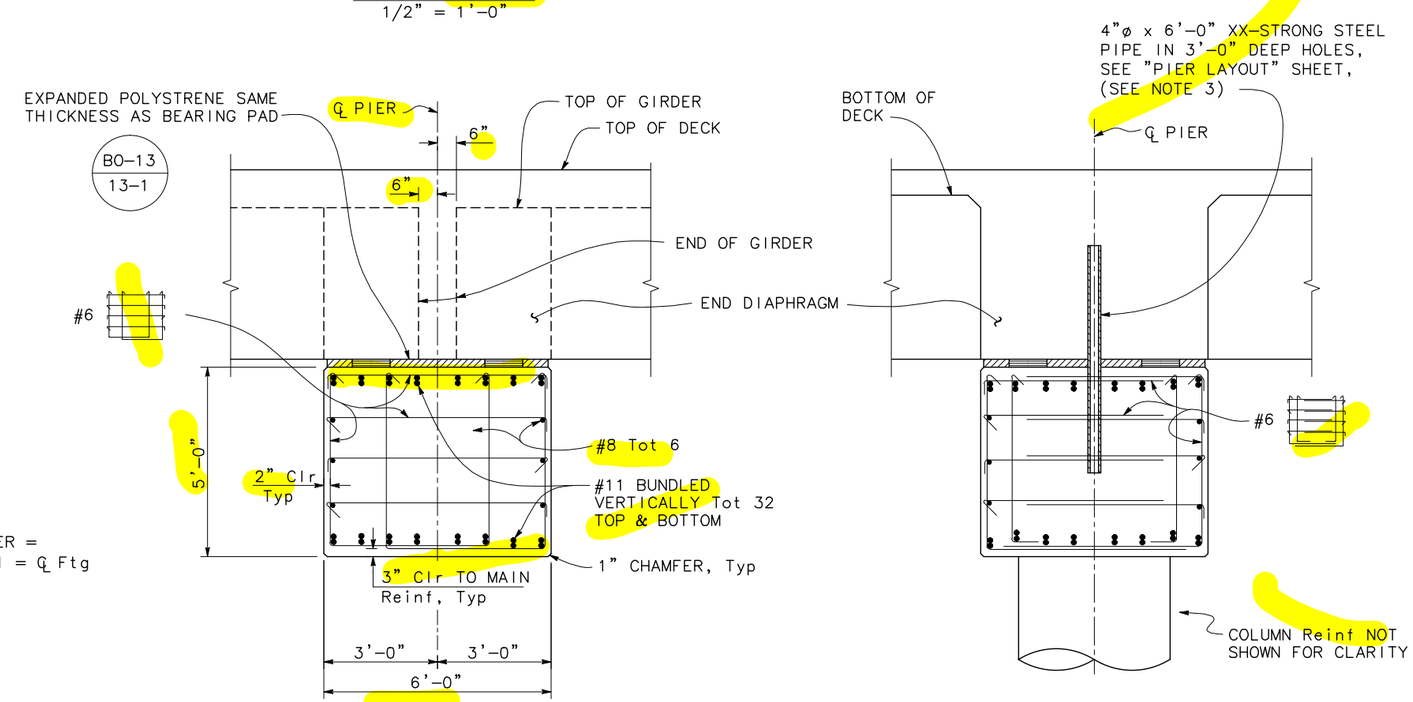

SECTION F-F
1/2" = 1'-0"

NOTE:
See "SECTION F-F" for information not shown.

SECTION G-G
1/2" = 1'-0"

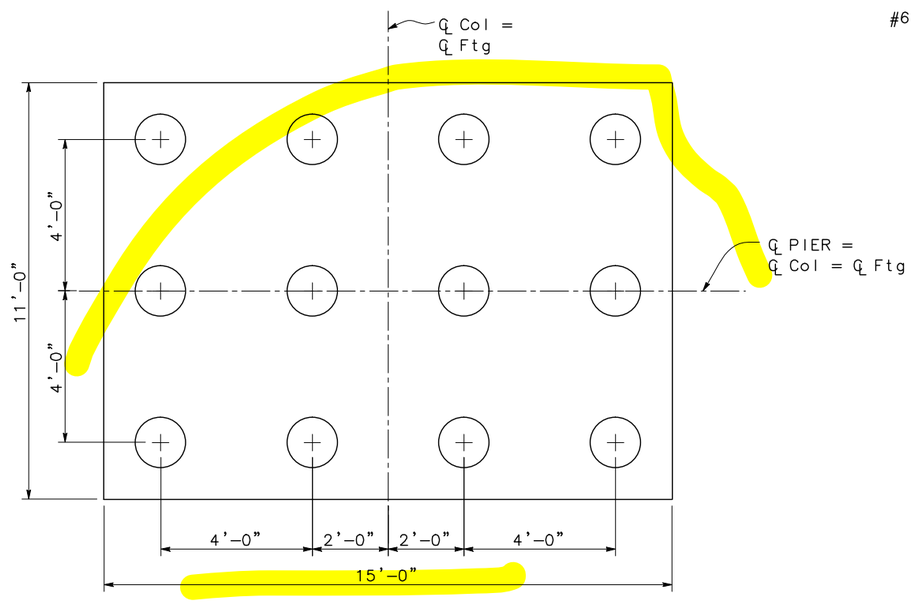

FOOTING PLAN
1/2" = 1'-0"

NOTES:
1. For locations of "SECTION F-F", "SECTION G-G" and "SECTION H-H", see "PIER LAYOUT" sheet.
2. Location of "T" headed reinforcement around column.
3. Fill pipe with grout.

NOTE:
THE CONTRACTOR SHALL VERIFY ALL CONTROLLING FIELD DIMENSIONS BEFORE ORDERING OR FABRICATING ANY MATERIAL.

DESIGN OVERSIGHT

SIGN OFF DATE

DESIGN DETAIL SHEET (ENGLISH) (REV.7/16/10)

	BY	CHECKED
DESIGN	T. PHAM	Y. REN
DETAILS	G. BOYKO	T. PHAM
QUANTITIES	G. GUARDADO	N. FELDE

ORIGINAL SCALE IN INCHES FOR REDUCED PLANS 0 1 2 3

PREPARED FOR THE SACRAMENTO COUNTY DEPARTMENT OF TRANSPORTATION

JASON HICKEY
PROJECT ENGINEER

UNIT: X
PROJECT NUMBER & PHASE: X

BRIDGE NO. 24C0606
POST MILES

LAGUNA CREEK BRIDGE (REPLACE)
PIER DETAILS

DISREGARD PRINTS BEARING EARLIER REVISION DATES

REVISION DATES (PRELIMINARY STAGE ONLY): 11/26/13 11/06/20 04/28/14 05/07/14 12/02/14 05/18/15 07/28/16 08/12/16 09/12/16

SHEET 10 OF 23

CONTRACT NO.: X PROJECT ID:

FILE => $REQUEST

V:\Sacramento Co-SA-13108-Alta Mesa Rd Bridge Replacement\CADD\Structures\09-10 AM_PL.dwg 10/28/2020 1:23 PM

USERNAME => $USER DATE PLOTTED => $DATE TIME PLOTTED => $TIME

DIST	COUNTY	ROUTE	POST MILES TOTAL PROJECT	SHEET No	TOTAL SHEETS
03	SAC				

REGISTERED CIVIL ENGINEER 11/6/20 DATE

PLANS APPROVAL DATE

REGISTERED PROFESSIONAL ENGINEER TRUONG VIET PHAM No. 81809 Exp. 3/31/22 CIVIL STATE OF CALIFORNIA

The State of California or its officers or agents shall not be responsible for the accuracy or completeness of scanned copies of this plan sheet.

SACRAMENTO COUNTY
411 BRANCH CENTER ROAD
SACRAMENTO, CA 95827

MARK THOMAS & COMPANY, INC.
7300 FOLSOM BOULEVARD, SUITE 203
SACRAMENTO, CA 95826

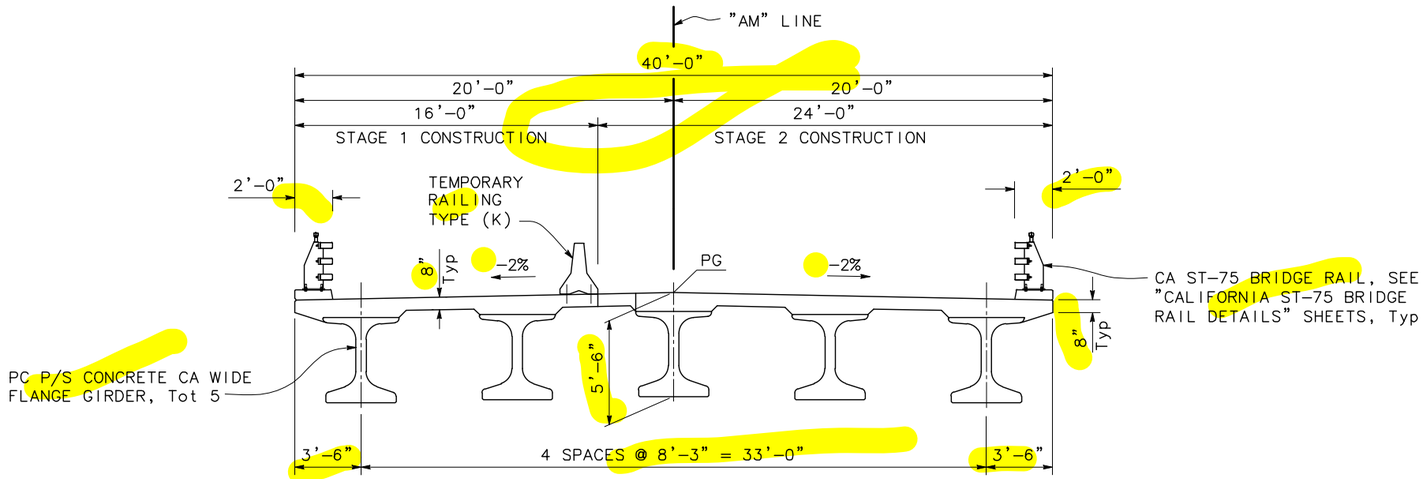

TYPICAL SECTION

1/4" = 1'-0"

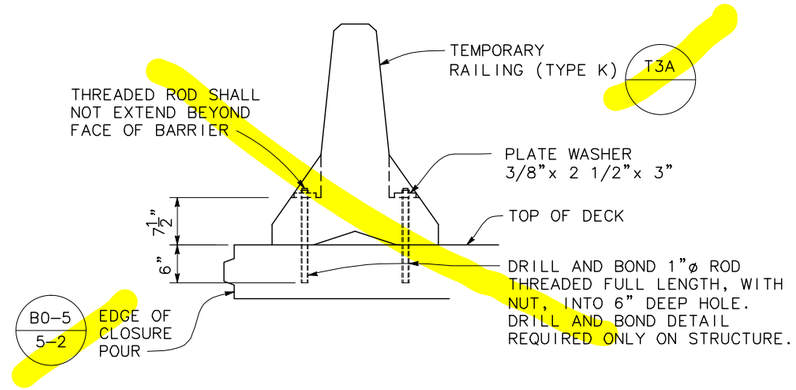

TEMPORARY RAILING (TYPE K) ATTACHMENT DETAILS

NO SCALE

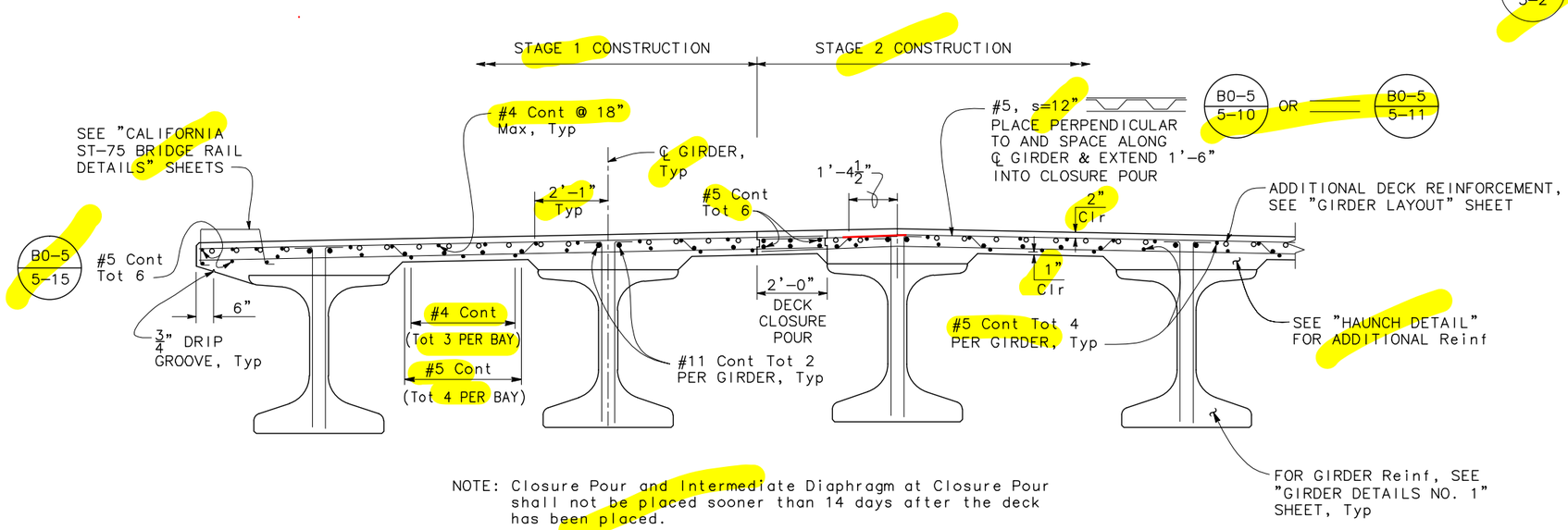

NOTE: Closure Pour and Intermediate Diaphragm at Closure Pour shall not be placed sooner than 14 days after the deck has been placed.

PART TYPICAL SECTION

1/2" = 1'-0"

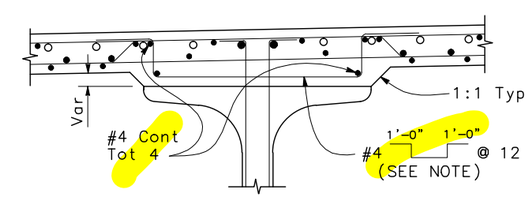

HAUNCH DETAIL

NO SCALE

NOTE: Reinf shown is in addition to "PART TYPICAL SECTION" Reinf

NOTE:
THE CONTRACTOR SHALL VERIFY ALL CONTROLLING FIELD DIMENSIONS BEFORE ORDERING OR FABRICATING ANY MATERIAL.

DESIGN OVERSIGHT	DESIGN	BY T. PHAM	CHECKED Y. REN	PREPARED FOR THE SACRAMENTO COUNTY DEPARTMENT OF TRANSPORTATION
SIGN OFF DATE	DETAILS	BY G. BOYKO	CHECKED T. PHAM	JASON HICKEY, PROJECT ENGINEER
	QUANTITIES	BY G. GUARDADO	CHECKED N. FELDE	

BRIDGE NO. 24C0606 | POST MILES

LAGUNA CREEK BRIDGE (REPLACE)

TYPICAL SECTION

DESIGN DETAIL SHEET (ENGLISH) (REV.7/16/10)

ORIGINAL SCALE IN INCHES FOR REDUCED PLANS 0 1 2 3

UNIT: X
PROJECT NUMBER & PHASE: X

DISREGARD PRINTS BEARING EARLIER REVISION DATES

REVISION DATES (PRELIMINARY STAGE ONLY) 11/04/13 04/28/14 04/29/14 12/02/14 05/19/15 07/29/16 08/12/16 09/13/16 11/06/20

SHEET 11 OF 23

CONTRACT NO.: X PROJECT ID:

FILE => $REQUEST

V:\Sacramento Co-SA-13108-Alta Mesa Rd Bridge Replacement\CADD\Structures\11 AM_TS.dwg 10/28/2020 2:51 PM

USERNAME => $USER DATE PLOTTED => $DATE TIME PLOTTED => $TIME

DIST	COUNTY	ROUTE	POST MILES TOTAL PROJECT	SHEET No	TOTAL SHEETS
03	SAC				

REGISTERED CIVIL ENGINEER 11/6/20 DATE

PLANS APPROVAL DATE

REGISTERED PROFESSIONAL ENGINEER TRUONG VIET PHAM No. 81809 Exp. 3/31/22 CIVIL STATE OF CALIFORNIA

The State of California or its officers or agents shall not be responsible for the accuracy or completeness of scanned copies of this plan sheet.

SACRAMENTO COUNTY
411 BRANCH CENTER ROAD
SACRAMENTO, CA 95827

MARK THOMAS & COMPANY, INC.
7300 FOLSOM BOULEVARD, SUITE 203
SACRAMENTO, CA 95826

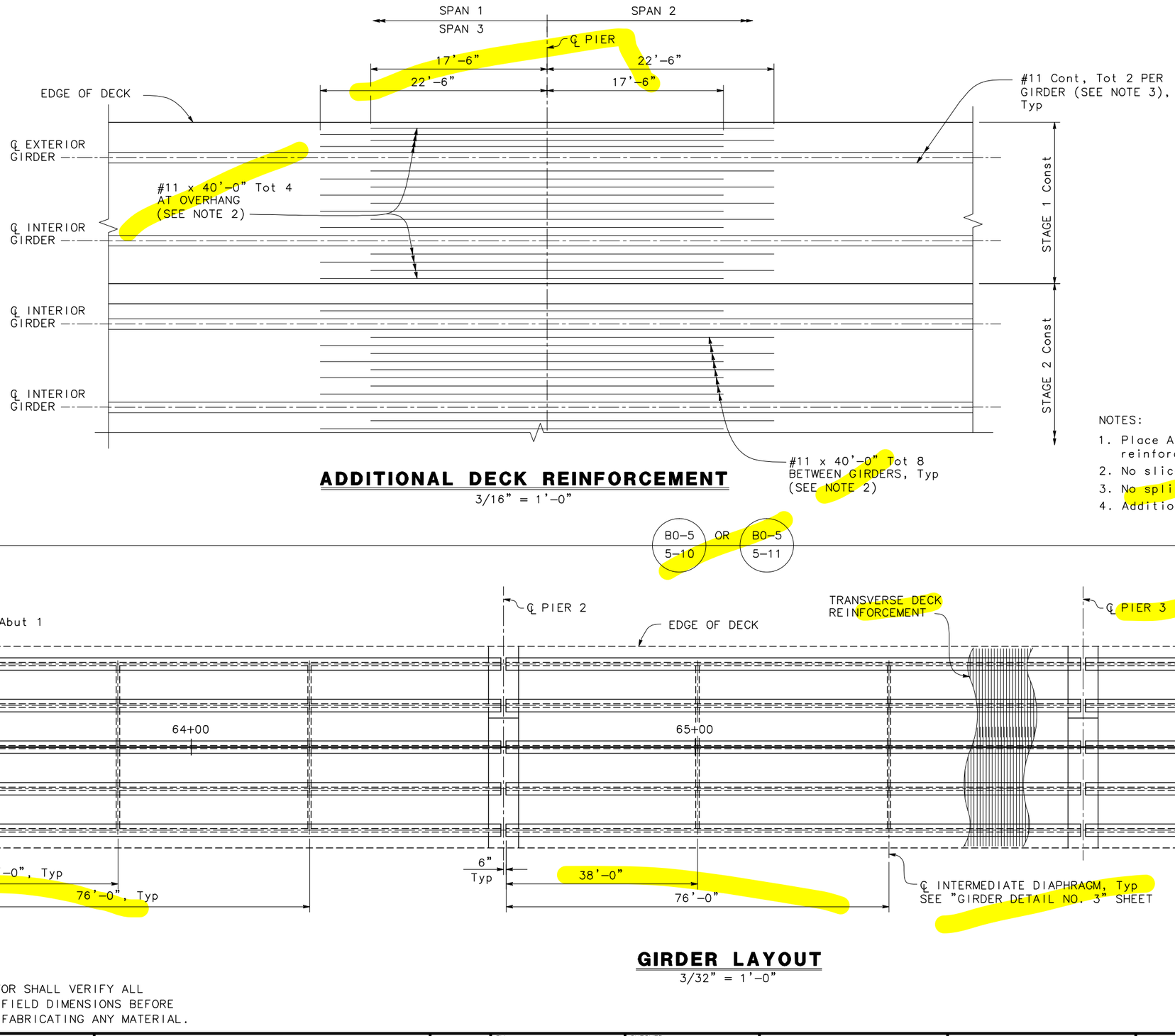

ADDITIONAL DECK REINFORCEMENT

3/16" = 1'-0"

NOTES:

1. Place Additional Deck Reinforcement between longitudinal deck reinforcement as shown on "TYPICAL SECTION" sheet.
2. No slices allowed for #11 bars.
3. No splices allowed 25'-0" each side of ℄ Pier for #11 Cont bars.
4. Additional Deck Reinforcement at Pier 2 shown, Pier 3 similar.

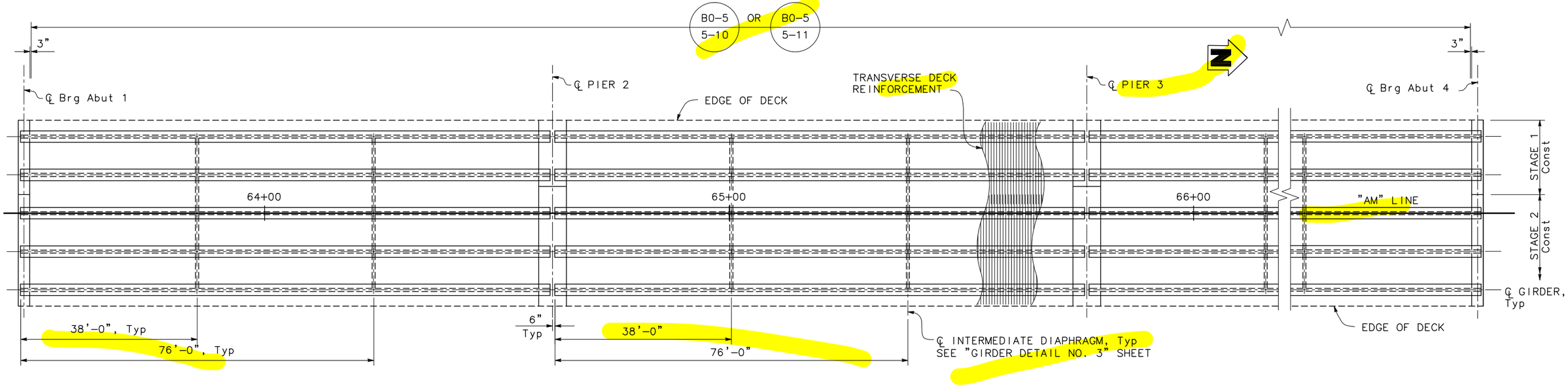

GIRDER LAYOUT

3/32" = 1'-0"

NOTE:
THE CONTRACTOR SHALL VERIFY ALL CONTROLLING FIELD DIMENSIONS BEFORE ORDERING OR FABRICATING ANY MATERIAL.

DESIGN OVERSIGHT

SIGN OFF DATE

	BY	CHECKED
DESIGN	T. PHAM	Y. REN
DETAILS	G. BOYKO	T. PHAM
QUANTITIES	G. GUARDADO	N. FELDE

PREPARED FOR THE SACRAMENTO COUNTY DEPARTMENT OF TRANSPORTATION

JASON HICKEY
PROJECT ENGINEER

BRIDGE NO. 24C0606
POST MILES

LAGUNA CREEK BRIDGE (REPLACE)
GIRDER LAYOUT

DESIGN DETAIL SHEET (ENGLISH) (REV.7/16/10)

ORIGINAL SCALE IN INCHES FOR REDUCED PLANS 0 1 2 3

UNIT: X
PROJECT NUMBER & PHASE: X

DISREGARD PRINTS BEARING EARLIER REVISION DATES

REVISION DATES (PRELIMINARY STAGE ONLY) 11/28/13 03/28/14 04/23/14 05/07/14 12/02/14 05/18/15 07/28/16 08/31/16 11/06/20

SHEET 12 OF 23

CONTRACT NO.: X PROJECT ID:

FILE => $REQUEST

USERNAME => $USER DATE PLOTTED => $DATE TIME PLOTTED => $TIME

V:\Sacramento Co-SA-13108-Alta Mesa Rd Bridge Replacement\CADD\Structures\12 AM_GL.dwg 10/28/2020 2:56 PM

DIST	COUNTY	ROUTE	POST MILES TOTAL PROJECT	SHEET No	TOTAL SHEETS
03	SAC				

REGISTERED CIVIL ENGINEER 11/6/20 DATE

PLANS APPROVAL DATE

REGISTERED PROFESSIONAL ENGINEER TRUONG VIET PHAM No. 81809 Exp. 3/31/22 CIVIL STATE OF CALIFORNIA

The State of California or its officers or agents shall not be responsible for the accuracy or completeness of scanned copies of this plan sheet.

SACRAMENTO COUNTY
411 BRANCH CENTER ROAD
SACRAMENTO, CA 95827

MARK THOMAS & COMPANY, INC.
7300 FOLSOM BOULEVARD, SUITE 203
SACRAMENTO, CA 95826

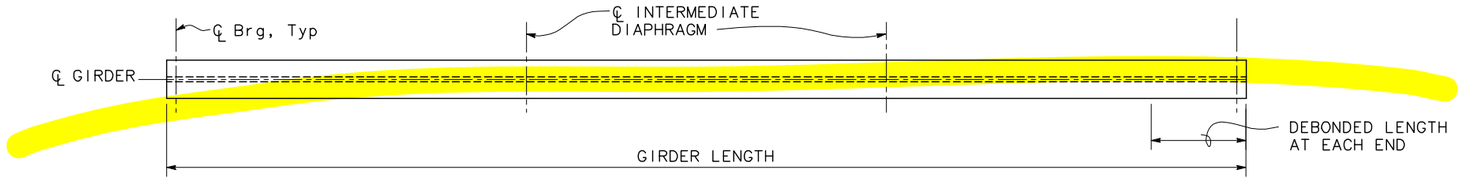

PLAN
NO SCALE

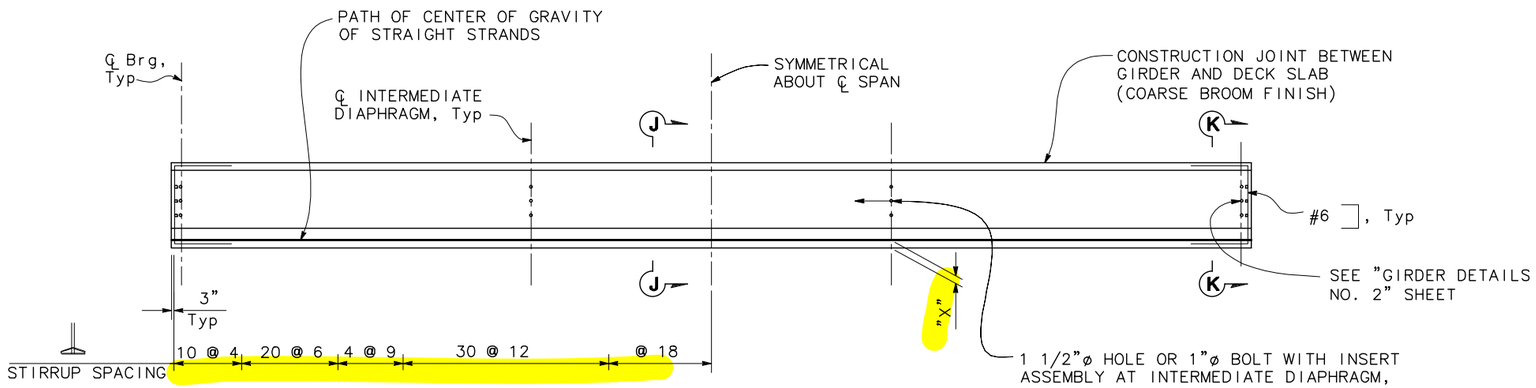

ELEVATION
NO SCALE

NOTES:
1. Girder stirrups shall be field bent after girder erection.
2. Insert assemblies shall be parallel to ℄ Intermediate Diaphragms.
3. Form holes shall be parallel to ℄ Brg.
4. Girder ends to be cast such that a level surface is provided at bearing pads.

TOTAL NO. OF 0.6"ø STRANDS	NO. OF DEBONDED STRANDS	DEBONDED LENGTH
36	12	9',12',15'

* ALTERNATE DEBONDED LENGTH AND MIRRORED ABOUT ℄ GIRDER

PER GIRDER:

GIRDER LENGTH	GIRDER DEPTH	"X" (in)	JACKING FORCE (P) (kips)	CONCRETE STRENGTH (ksi)		MIDSPAN DEAD LOAD DEFLECTION (in)	
				f'ci	f'c	DECK	RAIL
114'-0"	4'-6"	4.05	1582	7.0	10.0	1.70	0.15

why PT needed? OK to keep

0.04 ok

PRESTRESSING NOTES

1. The Jacking Force (P) is the jacking force required at the point of control along the span. The jacking force does not include any fabrication specific losses
2. The maximum tensile stress in the prestressing steel upon release shall not exceed 75% of the specified minimum ultimate tensile strength of the prestressing steel
3. The maximum temporary tensile stress (jacking stress) in the prestressing steel shall not exceed 80% of the specified minimum ultimate tensile strength of the prestressing steel
4. Concrete strength:
   f'ci is at time of initial stressing
   f'c is at 28 days
5. Deflection components are informational and will be used to set screed line elevations
6. Screed line elevations for deck concrete will be determined by the Engineer
7. Prestressing strand shall be 270 ksi low relaxation
8. No more than 33% of the total number of strands and 50% of the strands per horizontal row may be debonded
9. Strand locations may be adjusted as approved by the Engineer

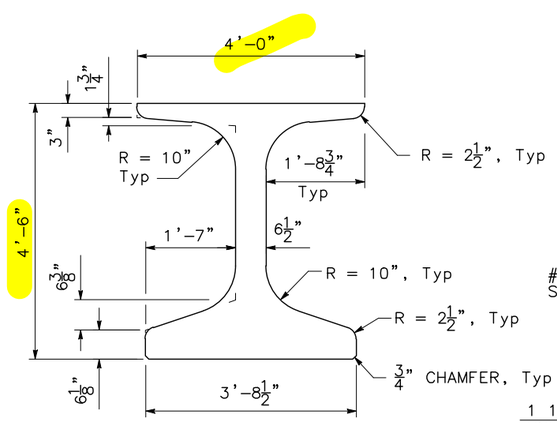

TYPICAL GIRDER SECTION
3/4" = 1'-0"

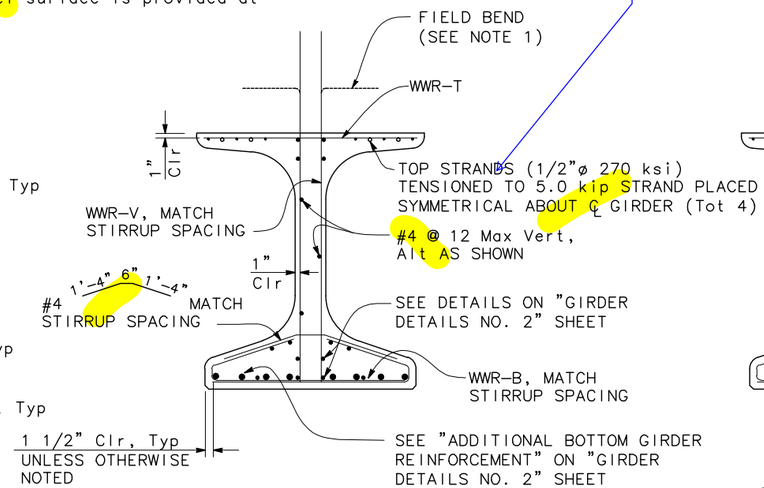

SECTION J-J
3/4" = 1'-0"

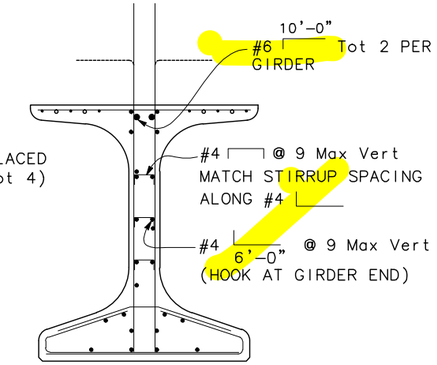

SECTION K-K
3/4" = 1'-0"

NOTE:
THE CONTRACTOR SHALL VERIFY ALL CONTROLLING FIELD DIMENSIONS BEFORE ORDERING OR FABRICATING ANY MATERIAL.

DESIGN	BY T. PHAM	CHECKED Y. REN	PREPARED FOR THE SACRAMENTO COUNTY DEPARTMENT OF TRANSPORTATION	JASON HICKEY PROJECT ENGINEER	BRIDGE NO. 24C0606
DETAILS	BY G. BOYKO	CHECKED T. PHAM			POST MILES
QUANTITIES	BY G. GUARDADO	CHECKED N. FELDE			

DESIGN OVERSIGHT

SIGN OFF DATE

LAGUNA CREEK BRIDGE (REPLACE)
GIRDER DETAILS NO. 1

DESIGN DETAIL SHEET (ENGLISH) (REV.7/16/10)

ORIGINAL SCALE IN INCHES FOR REDUCED PLANS 0 1 2 3

UNIT: X
PROJECT NUMBER & PHASE: X

DISREGARD PRINTS BEARING EARLIER REVISION DATES

REVISION DATES (PRELIMINARY STAGE ONLY): 11/28/13 04/29/14 05/08/14 12/02/14 05/18/15 07/29/16 08/14/16 11/06/20

SHEET 13 OF 23

FILE => $REQUEST

CONTRACT NO.: X PROJECT ID:

V:\Sacramento Co-SA-1310B-Alta Mesa Rd Bridge Replacement\CADD\Structures\13-16 AM_GD.dwg 10/28/2020 3:12 PM

USERNAME => $USER DATE PLOTTED => $DATE TIME PLOTTED => $TIME

DIST	COUNTY	ROUTE	POST MILES TOTAL PROJECT	SHEET No	TOTAL SHEETS
03	SAC				

REGISTERED CIVIL ENGINEER 11/6/20 DATE

PLANS APPROVAL DATE

REGISTERED PROFESSIONAL ENGINEER TRUONG VIET PHAM No. 81809 Exp. 3/31/22 CIVIL STATE OF CALIFORNIA

The State of California or its officers or agents shall not be responsible for the accuracy or completeness of scanned copies of this plan sheet.

SACRAMENTO COUNTY
411 BRANCH CENTER ROAD
SACRAMENTO, CA 95827

MARK THOMAS & COMPANY, INC.
7300 FOLSOM BOULEVARD, SUITE 203
SACRAMENTO, CA 95826

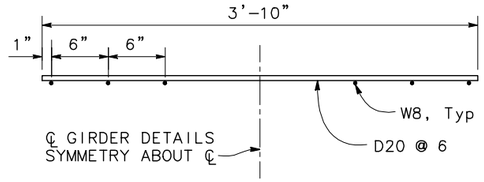

WWR-T

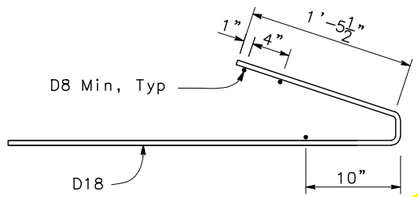

WWR-B

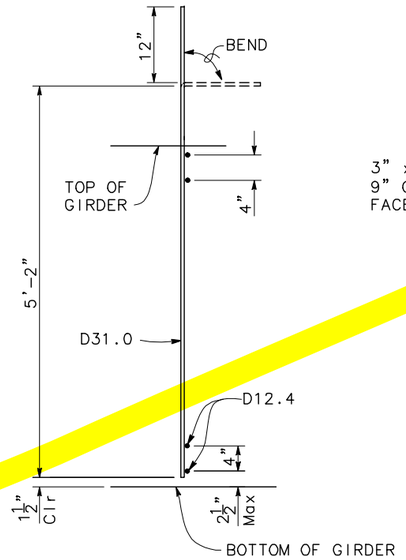

WWR-V

WELDED WIRE REINFORCEMENT DETAILS

NO SCALE

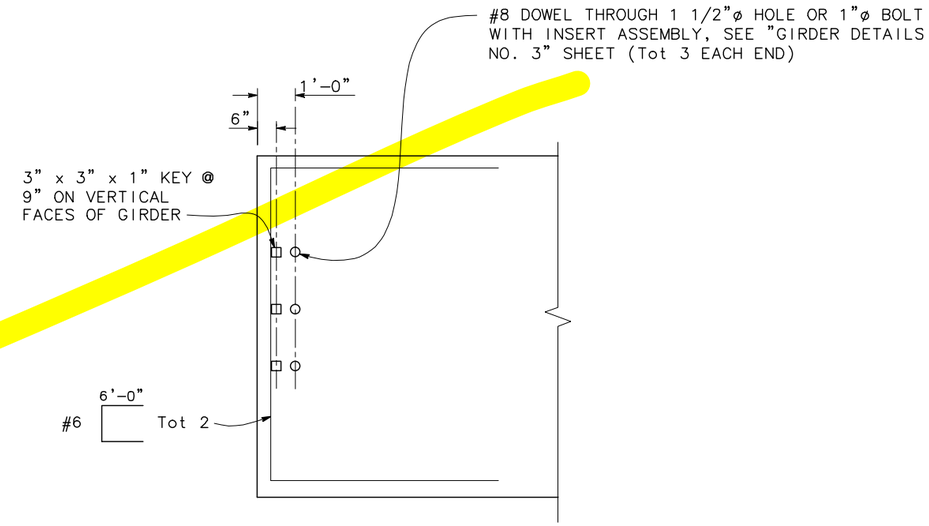

END GIRDER ELEVATION

NO SCALE

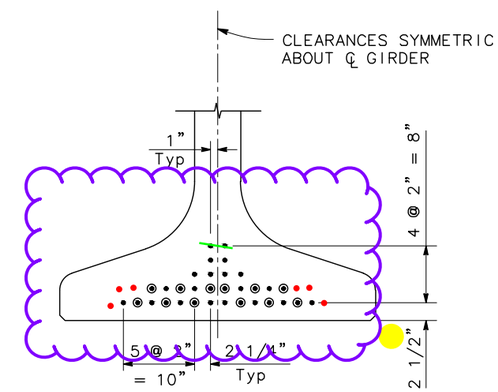

STRANDS LAYOUT

NO SCALE

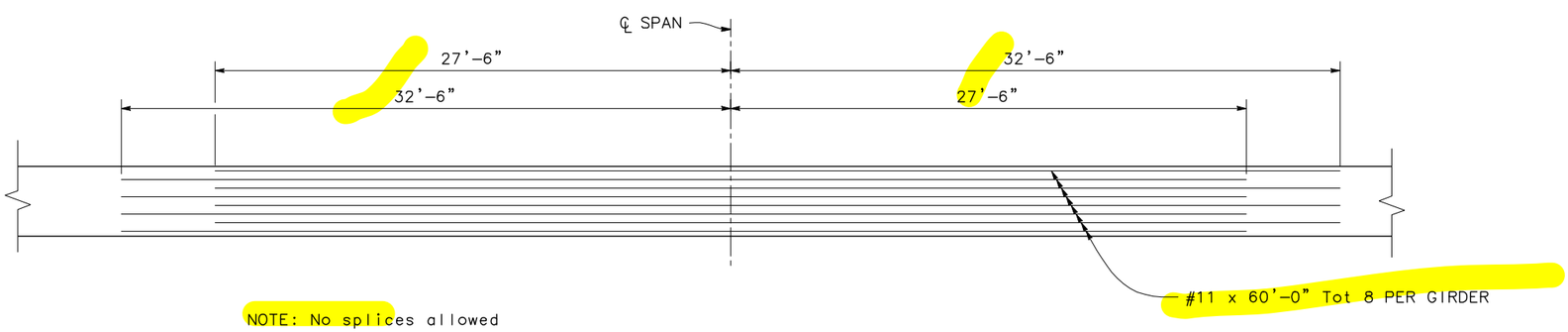

NOTE: No splices allowed

ADDITIONAL BOTTOM GIRDER REINFORCEMENT

NO SCALE

LEGEND:

- • Denotes continuously bonded strand location
- ◉ Denotes permissible debonded strand location

NOTES:

1. Clearances shown are for 0.6" nominal diameter strands.
2. Approval by the Engineer is required for deviation.

NOTE:
THE CONTRACTOR SHALL VERIFY ALL CONTROLLING FIELD DIMENSIONS BEFORE ORDERING OR FABRICATING ANY MATERIAL.

DESIGN OVERSIGHT

SIGN OFF DATE

	BY	CHECKED
DESIGN	T. PHAM	Y. REN
DETAILS	G. BOYKO	T. PHAM
QUANTITIES	G. GUARDADO	N. FELDE

PREPARED FOR THE SACRAMENTO COUNTY DEPARTMENT OF TRANSPORTATION

JASON HICKEY
PROJECT ENGINEER

BRIDGE NO. 24C0606
POST MILES

LAGUNA CREEK BRIDGE (REPLACE)
GIRDER DETAILS NO. 2

DESIGN DETAIL SHEET (ENGLISH) (REV.7/16/10)

ORIGINAL SCALE IN INCHES FOR REDUCED PLANS 0 1 2 3

UNIT: X
PROJECT NUMBER & PHASE: X

DISREGARD PRINTS BEARING EARLIER REVISION DATES

REVISION DATES (PRELIMINARY STAGE ONLY): 11/28/13 04/28/14 05/28/14 12/02/14 05/18/15 07/28/16 08/31/16 11/06/20

SHEET 14 OF 23

FILE => $REQUEST

CONTRACT NO.: X

PROJECT ID:

V:\Sacramento Co-SA-13108-Alta Mesa Rd Bridge Replacement\CADD\Structures\13-16 AM_GD.dwg 10/28/2020 3:13 PM

USERNAME => $USER DATE PLOTTED => $DATE TIME PLOTTED => $TIME

DIST	COUNTY	ROUTE	POST MILES TOTAL PROJECT	SHEET No	TOTAL SHEETS
03	SAC				

REGISTERED CIVIL ENGINEER — DATE 11/6/20

PLANS APPROVAL DATE

REGISTERED PROFESSIONAL ENGINEER — TRUONG VIET PHAM — No. 81809 — Exp. 3/31/22 — CIVIL — STATE OF CALIFORNIA

The State of California or its officers or agents shall not be responsible for the accuracy or completeness of scanned copies of this plan sheet.

SACRAMENTO COUNTY
411 BRANCH CENTER ROAD
SACRAMENTO, CA 95827

MARK THOMAS & COMPANY, INC.
7300 FOLSOM BOULEVARD, SUITE 203
SACRAMENTO, CA 95826

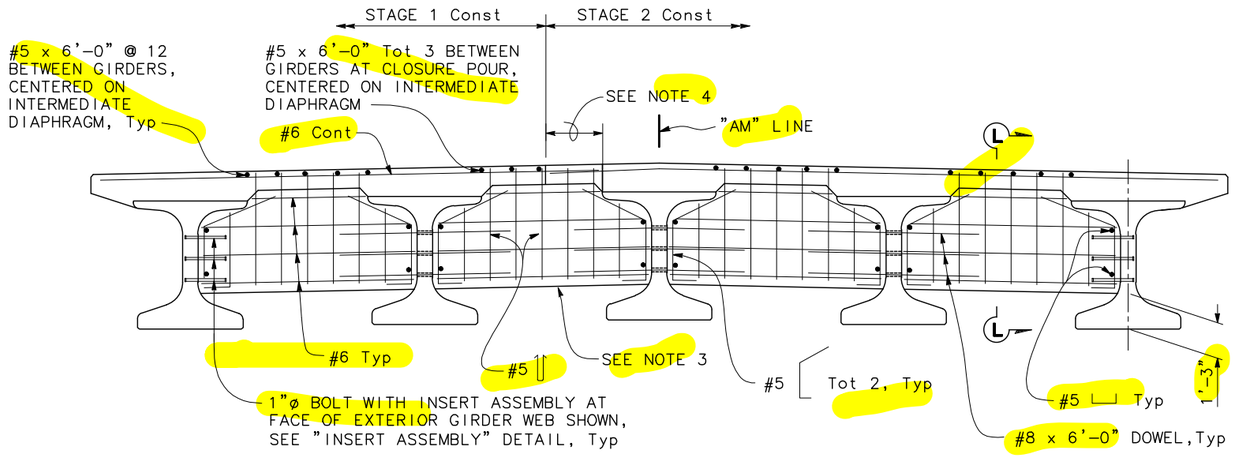

INTERMEDIATE DIAPHRAGM
3/8" = 1'-0"

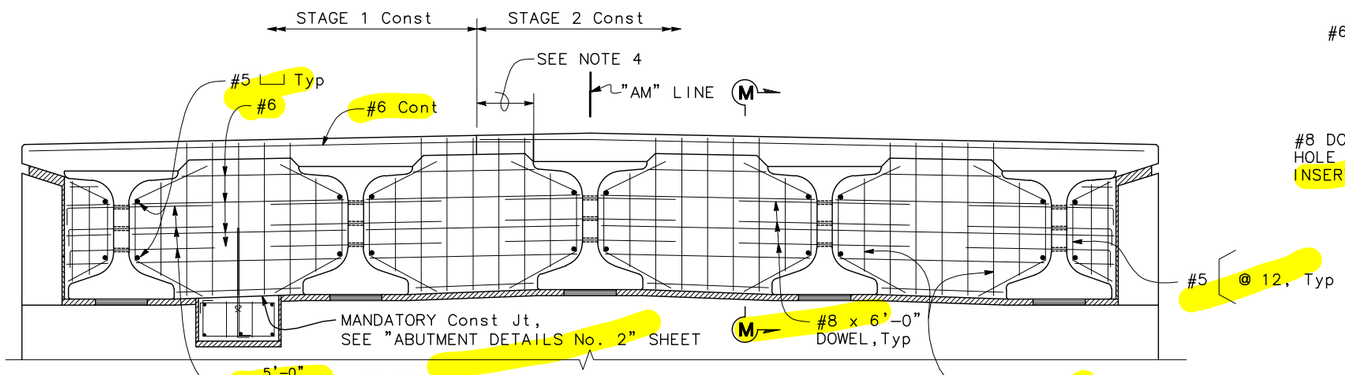

END DIAPHRAGM
3/8" = 1'-0"

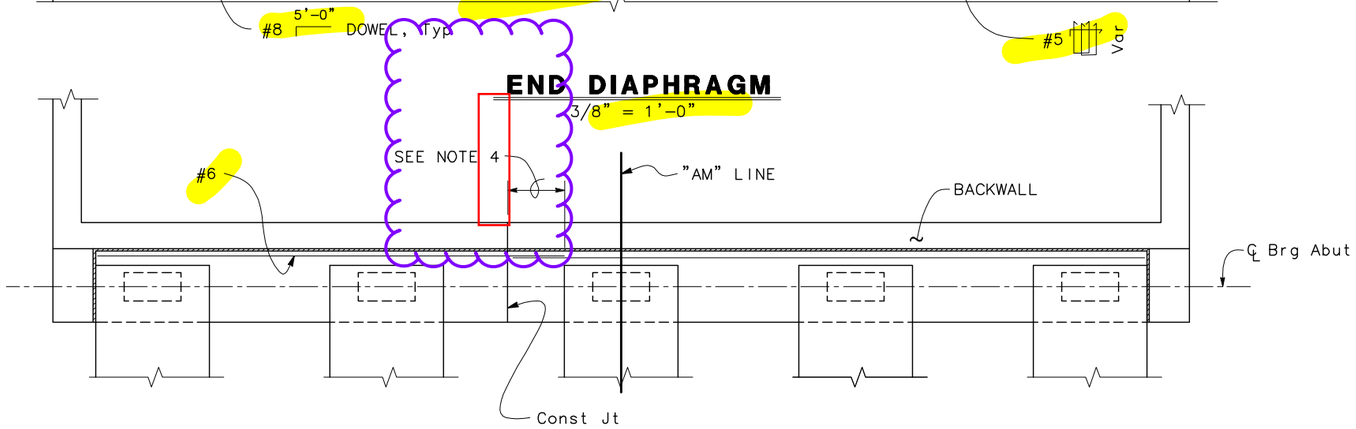

PLAN - END DIAPHRAGM
3/8" = 1'-0"

NOTE:
THE CONTRACTOR SHALL VERIFY ALL CONTROLLING FIELD DIMENSIONS BEFORE ORDERING OR FABRICATING ANY MATERIAL.

Note: Abut 4 shown, Abut 1 similar.

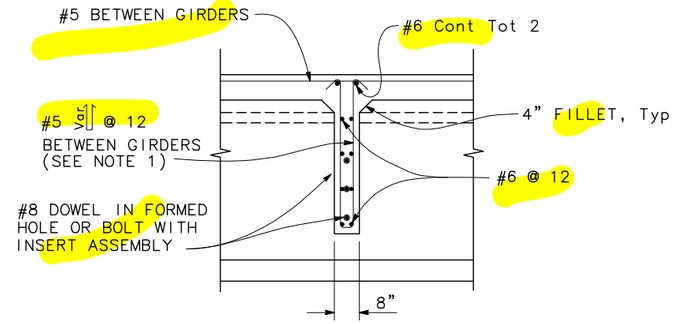

SECTION L-L
1/2" = 1'-0"

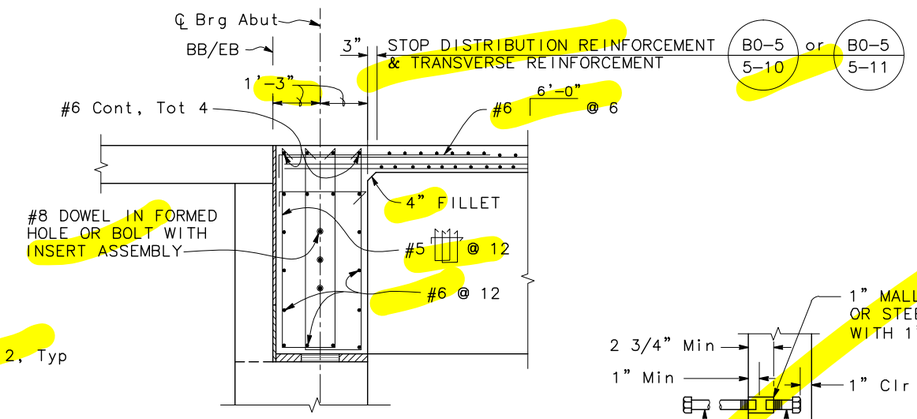

SECTION M-M
1/2" = 1'-0"

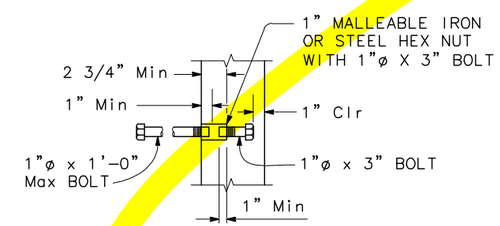

INSERT ASSEMBLY
NO SCALE

NOTES:
1. Hook reinforcement inward below girder top flange.
2. Intermediate diaphragm may be vertical or normal to deck grade.
3. Intermediate diaphragm at closure pour shall be constructed with closure pour.
4. Extend reinforcement 2'-0" beyond construction joint to lap with stage 2 construction. Reinforcement may be bent as necessary.

DESIGN	BY T. PHAM	CHECKED Y. REN	
DETAILS	BY G. BOYKO	CHECKED T. PHAM	
QUANTITIES	BY G. GUARDADO	CHECKED N. FELDE	

DESIGN OVERSIGHT
SIGN OFF DATE

PREPARED FOR THE SACRAMENTO COUNTY DEPARTMENT OF TRANSPORTATION

JASON HICKEY
PROJECT ENGINEER

BRIDGE NO. 24C0606
POST MILES

LAGUNA CREEK BRIDGE (REPLACE)
GIRDER DETAILS NO. 3

DESIGN DETAIL SHEET (ENGLISH) (REV.7/16/10)

ORIGINAL SCALE IN INCHES FOR REDUCED PLANS 0 1 2 3

UNIT: X
PROJECT NUMBER & PHASE: X

DISREGARD PRINTS BEARING EARLIER REVISION DATES

REVISION DATES (PRELIMINARY STAGE ONLY): 11/28/13 04/28/14 05/08/14 12/02/14 05/18/15 07/29/16 08/14/16 09/13/16 11/06/20

SHEET 15 OF 23

CONTRACT NO.: X PROJECT ID:

FILE => $REQUEST

USERNAME => $USER DATE PLOTTED => $DATE TIME PLOTTED => $TIME

V:\Sacramento Co-SA-13108-Alta Mesa Rd Bridge Replacement\CADD\Structures\13-16 AM_GD.dwg 10/28/2020 3:14 PM

DIST	COUNTY	ROUTE	POST MILES TOTAL PROJECT	SHEET No	TOTAL SHEETS
03	SAC				

REGISTERED CIVIL ENGINEER 11/6/20 DATE

PLANS APPROVAL DATE

REGISTERED PROFESSIONAL ENGINEER TRUONG VIET PHAM No. 81809 Exp. 3/31/22 CIVIL STATE OF CALIFORNIA

The State of California or its officers or agents shall not be responsible for the accuracy or completeness of scanned copies of this plan sheet.

SACRAMENTO COUNTY
411 BRANCH CENTER ROAD
SACRAMENTO, CA 95827

MARK THOMAS & COMPANY, INC.
7300 FOLSOM BOULEVARD, SUITE 203
SACRAMENTO, CA 95826

NOTE:

Extend reinforcement 2'-0" beyond construction joint to lap with stage 2 construction. Reinforcement may be bent as necessary.

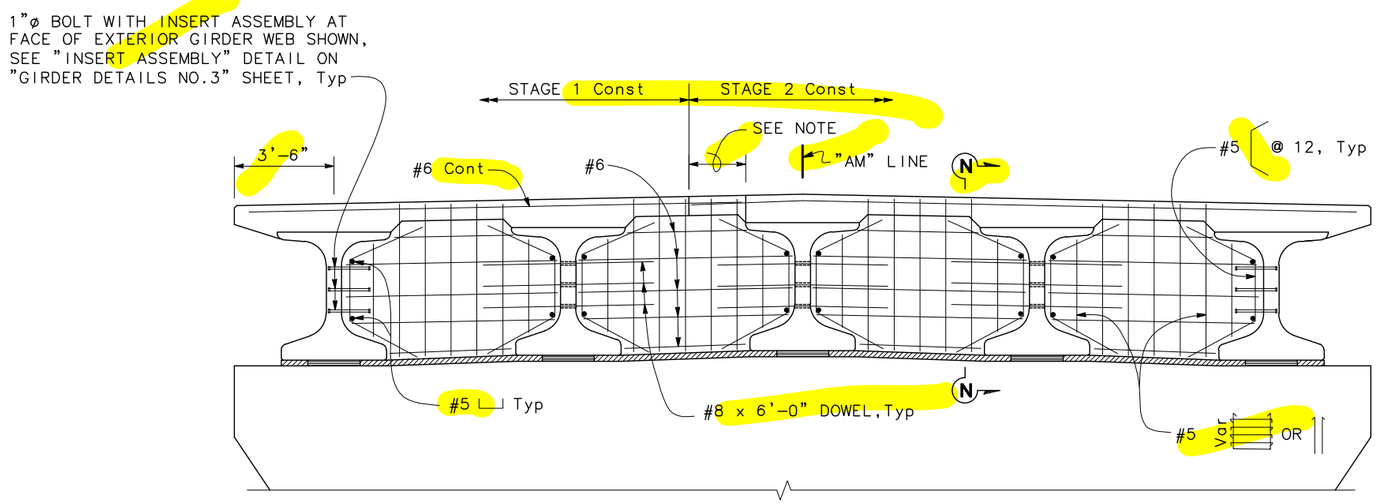

PIER ELEVATION
3/8" = 1'-0"

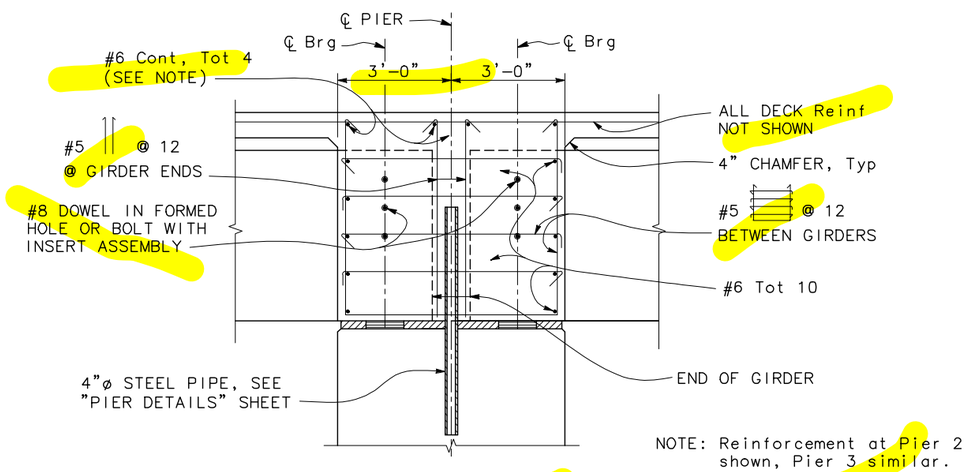

SECTION N-N
1/2" = 1'-0"

NOTE: Reinforcement at Pier 2 shown, Pier 3 similar.

NOTE:
THE CONTRACTOR SHALL VERIFY ALL CONTROLLING FIELD DIMENSIONS BEFORE ORDERING OR FABRICATING ANY MATERIAL.

DESIGN	BY T. PHAM	CHECKED Y. REN	
DETAILS	BY G. BOYKO	CHECKED T. PHAM	
QUANTITIES	BY G. GUARDADO	CHECKED N. FELDE	

DESIGN OVERSIGHT

SIGN OFF DATE

PREPARED FOR THE SACRAMENTO COUNTY DEPARTMENT OF TRANSPORTATION

JASON HICKEY
PROJECT ENGINEER

BRIDGE NO. 24C0606
POST MILES

LAGUNA CREEK BRIDGE (REPLACE)
GIRDER DETAILS NO. 4

DESIGN DETAIL SHEET (ENGLISH) (REV.7/16/10)

ORIGINAL SCALE IN INCHES FOR REDUCED PLANS 0 1 2 3

UNIT: X
PROJECT NUMBER & PHASE: X

DISREGARD PRINTS BEARING EARLIER REVISION DATES

REVISION DATES (PRELIMINARY STAGE ONLY) 07/28/16 08/31/16 11/06/20

SHEET 16 OF 23

FILE => $REQUEST

CONTRACT NO.: X PROJECT ID:

V:\Sacramento Co-SA-13108-Alta Mesa Rd Bridge Replacement\CADD\Structures\13-16 AM_GD.dwg 10/28/2020 3:17 PM

USERNAME => $USER DATE PLOTTED => $DATE TIME PLOTTED => $TIME

DIST	COUNTY	ROUTE	POST MILES TOTAL PROJECT	SHEET No	TOTAL SHEETS
03	SAC				

REGISTERED CIVIL ENGINEER — DATE 11/6/20

PLANS APPROVAL DATE

REGISTERED PROFESSIONAL ENGINEER — TRUONG VIET PHAM — No. 81809 — Exp. 3/31/22 — CIVIL — STATE OF CALIFORNIA

The State of California or its officers or agents shall not be responsible for the accuracy or completeness of scanned copies of this plan sheet.

SACRAMENTO COUNTY
411 BRANCH CENTER ROAD
SACRAMENTO, CA 95827

MARK THOMAS & COMPANY, INC.
7300 FOLSOM BOULEVARD, SUITE 203
SACRAMENTO, CA 95826

NOTE:
1. Anchor bolts may be tack welded to anchorage.

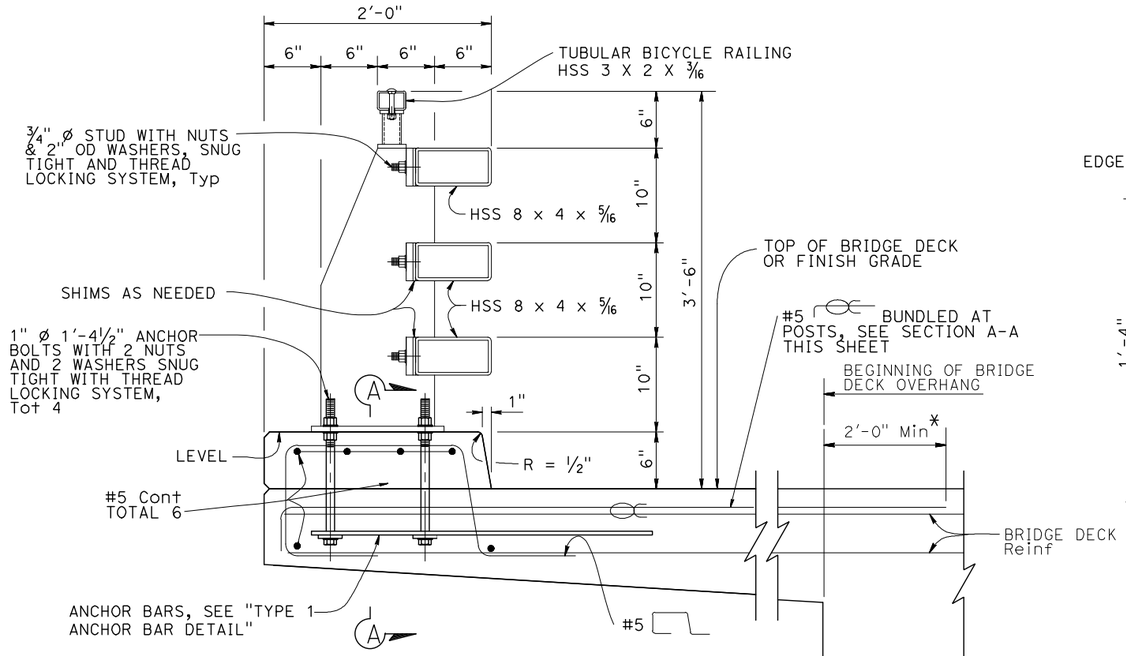

TYPICAL SECTION

NO SCALE

* #5 Bundled at posts to extend 2'-0" Min beyond beginning of bridge deck overhang.

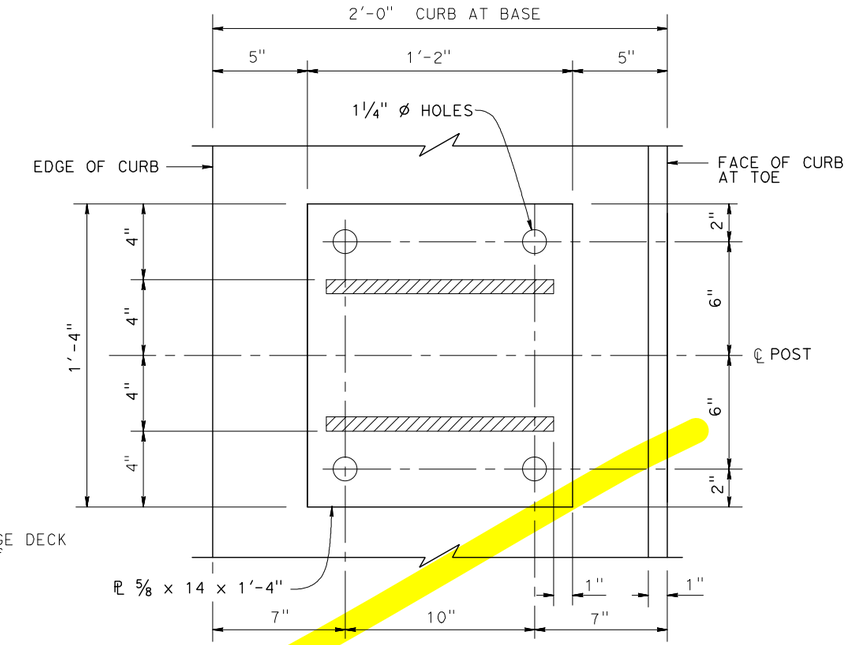

BASE PLATE

NO SCALE

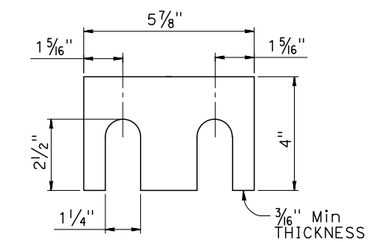

SHIM DETAILS

NO SCALE

NOTE:
Shims as needed between posts and HSS rail tubes.

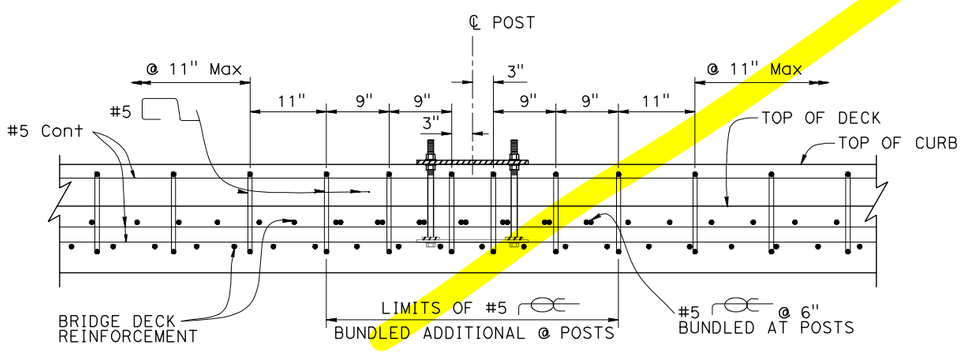

NOTE:
POST NOT SHOWN FOR CLARITY

SECTION A-A

NO SCALE

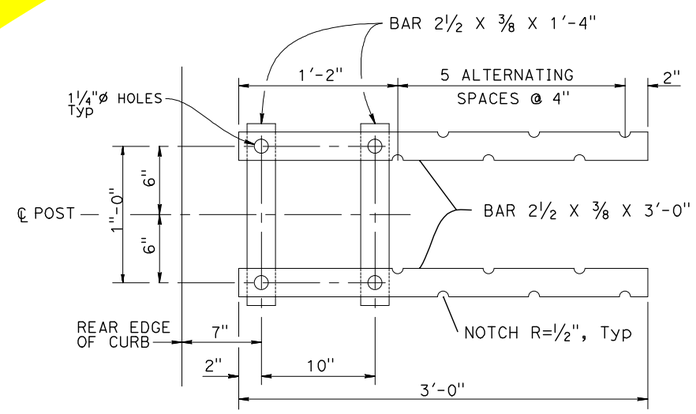

TYPE 1 ANCHOR BAR DETAIL

NO SCALE

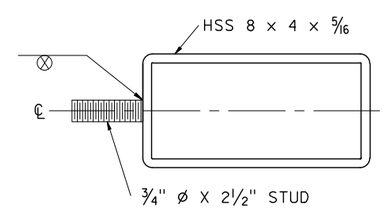

RAIL SECTION AT POST

NO SCALE

DESIGN OVERSIGHT		DESIGN	BY T. PHAM	CHECKED Y. REN	PREPARED FOR THE SACRAMENTO COUNTY DEPARTMENT OF TRANSPORTATION
SIGN OFF DATE		DETAILS	BY G. BOYKO	CHECKED T. PHAM	JASON HICKEY, PROJECT ENGINEER
		QUANTITIES	BY G. GUARDADO	CHECKED N. FELDE	BRIDGE NO. 24C0606 — POST MILES

LAGUNA CREEK BRIDGE (REPLACE)

CALIFORNIA ST-75 BRIDGE RAIL DETAILS No.1

DESIGN DETAIL SHEET (ENGLISH) (REV.7/16/10)

ORIGINAL SCALE IN INCHES FOR REDUCED PLANS 0 1 2 3

UNIT: X
PROJECT NUMBER & PHASE: X

DISREGARD PRINTS BEARING EARLIER REVISION DATES

REVISION DATES (PRELIMINARY STAGE ONLY): 11/06/20

SHEET 17 OF 23

FILE => $REQUEST

CONTRACT NO.: X PROJECT ID:

USERNAME => $USER DATE PLOTTED => $DATE TIME PLOTTED => $TIME

V:\Sacramento Co-SA-13108-Alta Mesa Rd Bridge Replacement\CADD\Structures\17 AM_ST-75 (ll).dwg 10/29/2020 4:00 PM

DIST	COUNTY	ROUTE	POST MILES TOTAL PROJECT	SHEET No	TOTAL SHEETS
03	SAC				

REGISTERED CIVIL ENGINEER — DATE 11/6/20

PLANS APPROVAL DATE

REGISTERED PROFESSIONAL ENGINEER — TRUONG VIET PHAM — No. 81809 — Exp. 3/31/22 — CIVIL — STATE OF CALIFORNIA

The State of California or its officers or agents shall not be responsible for the accuracy or completeness of scanned copies of this plan sheet.

SACRAMENTO COUNTY
411 BRANCH CENTER ROAD
SACRAMENTO, CA 95827

MARK THOMAS & COMPANY, INC.
7500 FOLSOM BOULEVARD, SUITE 203
SACRAMENTO, CA 95826

clean up

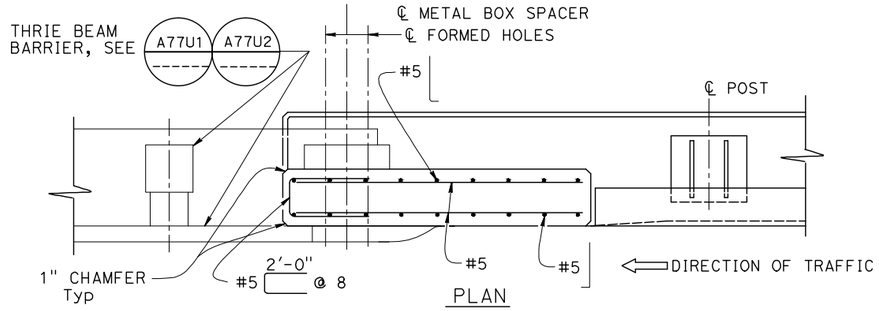

DEPARTURE END BLOCK DETAIL

NO SCALE

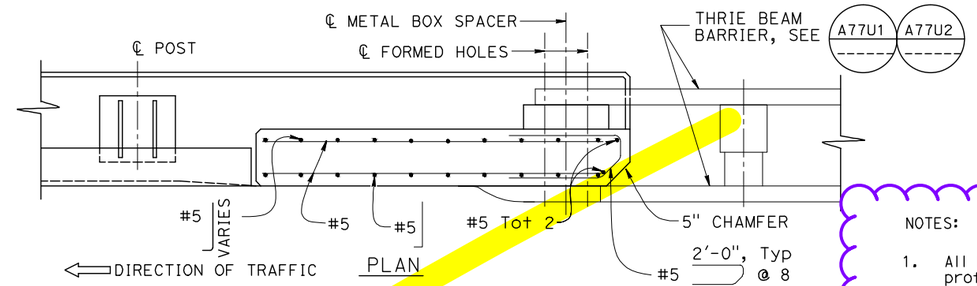

APPROACH TRANSITION BLOCK DETAIL

NO SCALE

NOTES:

1. All horizontal members are parallel to longitudinal profile grade.
2. Posts are normal to profile grade of structure.
3. Posts are vertical to the transverse cross section.
4. If departure end block is within the Clear Recovery Zone (CRZ, 30 feet for expressways and freeways and 20 feet for conventional highways) of opposing traffic, then use the approach end block at the departure end.
5. Anchor bolts may be tack welded to anchorage.

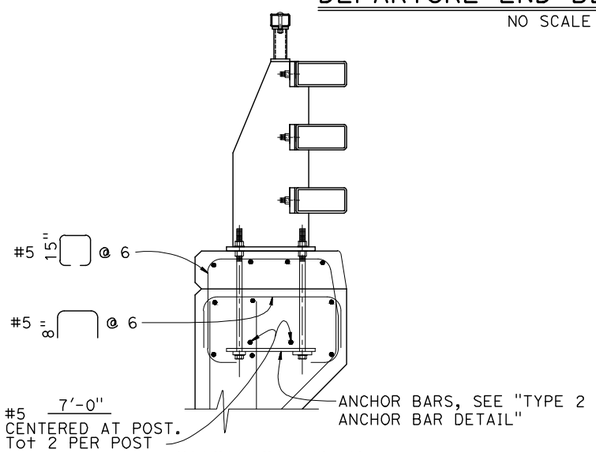

SECTION B-B

NO SCALE

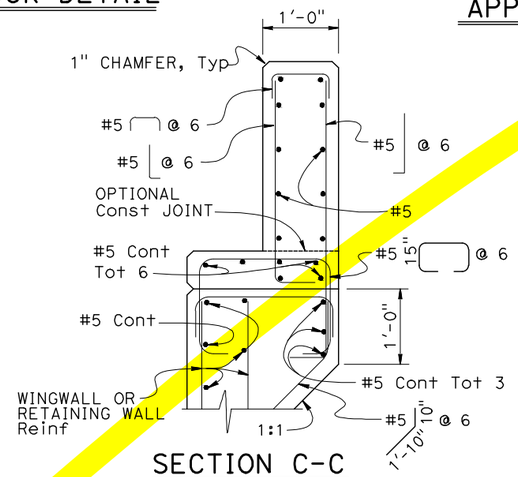

SECTION C-C

NO SCALE

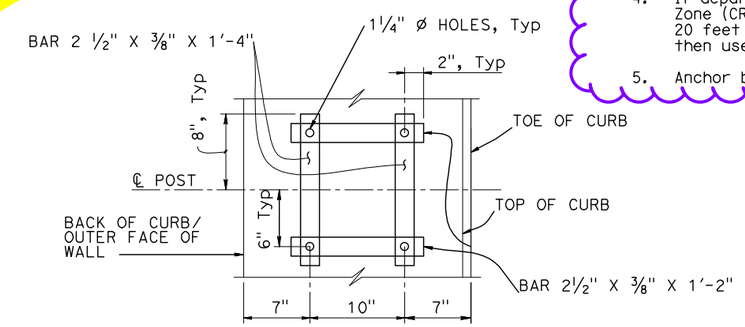

TYPE 2 ANCHOR BAR DETAIL

NO SCALE

NOTE:
For details not shown see "Section C-C"

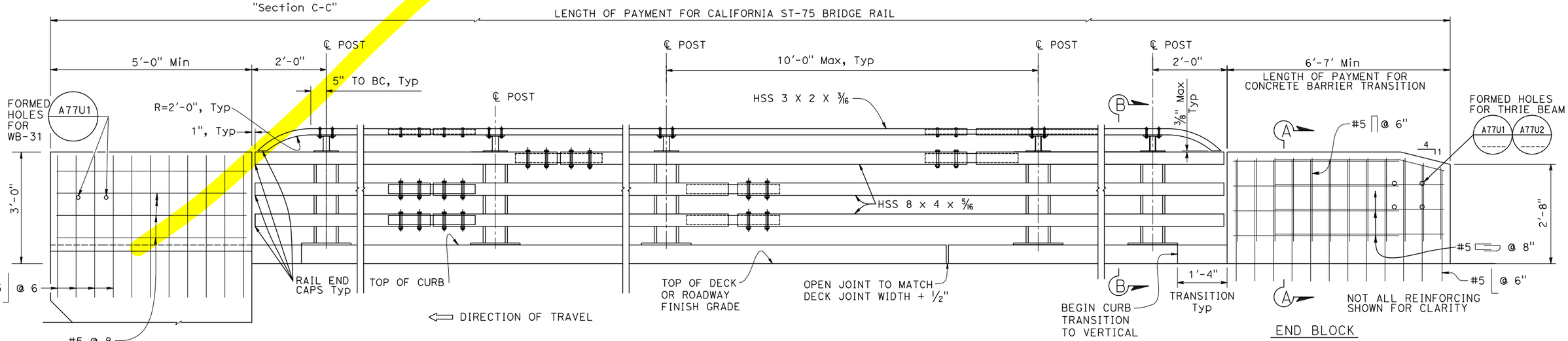

ELEVATION

NO SCALE

DESIGN	BY T. PHAM	CHECKED Y. REN	
DETAILS	BY G. BOYKO	CHECKED T. PHAM	
QUANTITIES	BY G. GUARDADO	CHECKED N. FELDE	

DESIGN OVERSIGHT

SIGN OFF DATE

DESIGN DETAIL SHEET (ENGLISH) (REV.7/16/10)

ORIGINAL SCALE IN INCHES FOR REDUCED PLANS 0 1 2 3

PREPARED FOR THE SACRAMENTO COUNTY DEPARTMENT OF TRANSPORTATION

JASON HICKEY
PROJECT ENGINEER

UNIT: X
PROJECT NUMBER & PHASE: X

BRIDGE NO. 24C0606
POST MILES

LAGUNA CREEK BRIDGE (REPLACE)

CALIFORNIA ST-75 BRIDGE RAIL DETAILS No.2

DISREGARD PRINTS BEARING EARLIER REVISION DATES

REVISION DATES (PRELIMINARY STAGE ONLY) 05/27/13 11/06/20

SHEET 18 OF 23

FILE => $REQUEST

CONTRACT NO.: X

PROJECT ID:

V:\Sacramento Co-SA-13108-Alta Mesa Rd Bridge Replacement\CADD\Structures\18 AM_ST-75 (2).dwg 10/29/2020 4:17 PM

USERNAME => $USER DATE PLOTTED => $DATE TIME PLOTTED => $TIME

DIST	COUNTY	ROUTE	POST MILES TOTAL PROJECT	SHEET No	TOTAL SHEETS
03	SAC				

REGISTERED CIVIL ENGINEER 11/6/20 DATE

PLANS APPROVAL DATE

REGISTERED PROFESSIONAL ENGINEER TRUONG VIET PHAM No. 81809 Exp. 3/31/22 CIVIL STATE OF CALIFORNIA

The State of California or its officers or agents shall not be responsible for the accuracy or completeness of scanned copies of this plan sheet.

SACRAMENTO COUNTY
411 BRANCH CENTER ROAD
SACRAMENTO, CA 95827

MARK THOMAS & COMPANY, INC.
7300 FOLSOM BOULEVARD, SUITE 203
SACRAMENTO, CA 95826

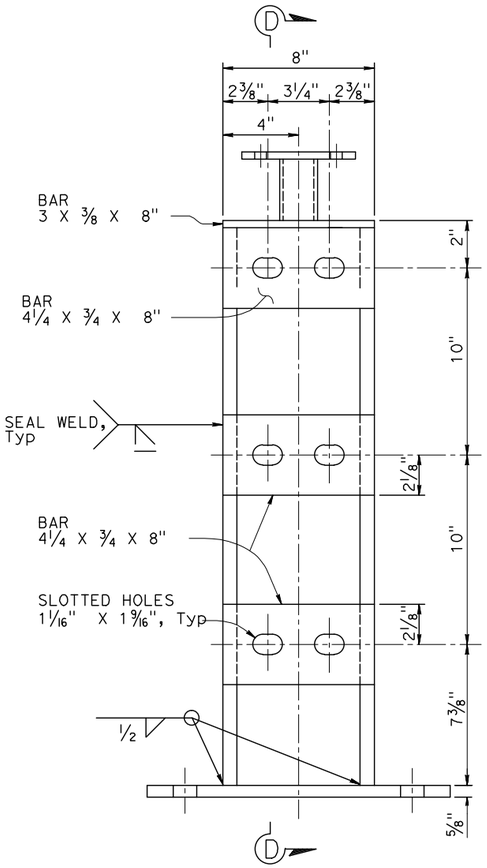

POST DETAIL

NO SCALE

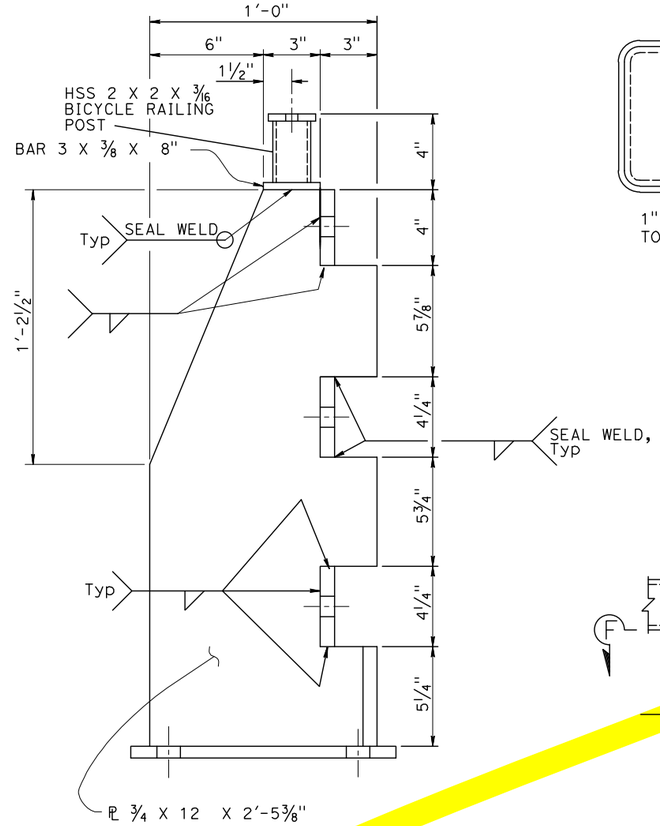

SECTION D-D

NO SCALE

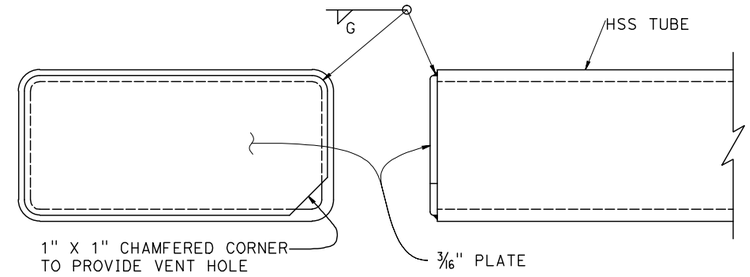

RAIL END CAP

NO SCALE

FOR VEHICULAR RAIL TUBES AND BICYCLE RAIL TUBES

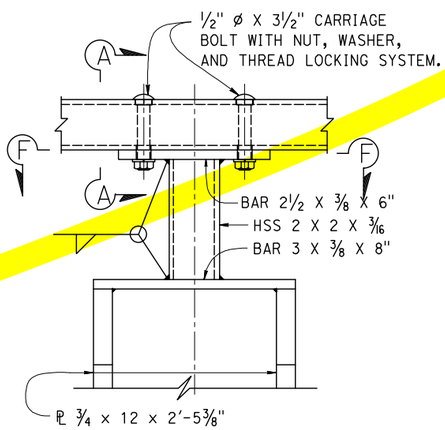

ELEVATION

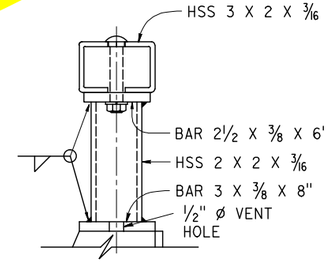

SECTION E-E

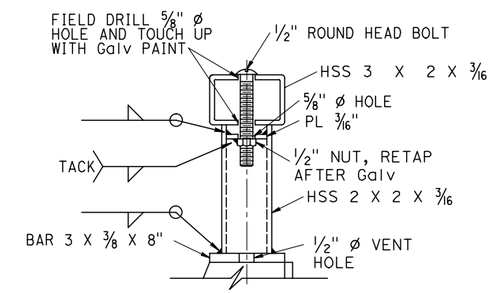

SECTION E-E ALTERNATIVE

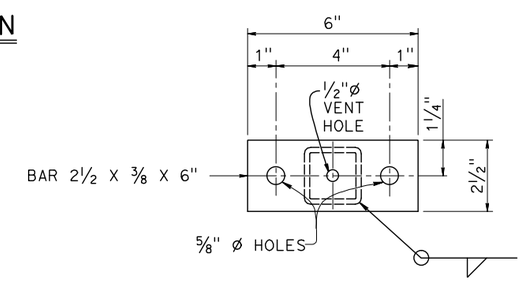

SECTION F-F

BICYCLE RAILING CONNECTION DETAILS

NO SCALE

DESIGN OVERSIGHT	DESIGN	BY T. PHAM	CHECKED Y. REN	PREPARED FOR THE SACRAMENTO COUNTY DEPARTMENT OF TRANSPORTATION	JASON HICKEY PROJECT ENGINEER
SIGN OFF DATE	DETAILS	BY G. BOYKO	CHECKED T. PHAM		
	QUANTITIES	BY G. GUARDADO	CHECKED N. FELDE		

BRIDGE NO. 24C0606 POST MILES

LAGUNA CREEK BRIDGE (REPLACE)

CALIFORNIA ST-75 BRIDGE RAIL DETAILS No.3

DESIGN DETAIL SHEET (ENGLISH) (REV.7/16/10)

ORIGINAL SCALE IN INCHES FOR REDUCED PLANS 0 1 2 3

UNIT: X
PROJECT NUMBER & PHASE: X

DISREGARD PRINTS BEARING EARLIER REVISION DATES

REVISION DATES (PRELIMINARY STAGE ONLY) 05/23/13 11/06/20

SHEET 19 OF 23

FILE => $REQUEST

CONTRACT NO.: X PROJECT ID:

V:\Sacramento Co-SA-13108-Alta Mesa Rd Bridge Replacement\CADD\Structures\19 AM_ST-75 (3).dwg 10/29/2020 4:15 PM
USERNAME => $USER DATE PLOTTED => $DATE TIME PLOTTED => $TIME

DIST	COUNTY	ROUTE	POST MILES TOTAL PROJECT	SHEET No	TOTAL SHEETS
03	SAC				

REGISTERED CIVIL ENGINEER — DATE 11/6/20

PLANS APPROVAL DATE

REGISTERED PROFESSIONAL ENGINEER — TRUONG VIET PHAM — No. 81809 — Exp. 3/31/22 — CIVIL — STATE OF CALIFORNIA

The State of California or its officers or agents shall not be responsible for the accuracy or completeness of scanned copies of this plan sheet.

SACRAMENTO COUNTY
411 BRANCH CENTER ROAD
SACRAMENTO, CA 95827

MARK THOMAS & COMPANY, INC.
7300 FOLSOM BOULEVARD, SUITE 203
SACRAMENTO, CA 95826

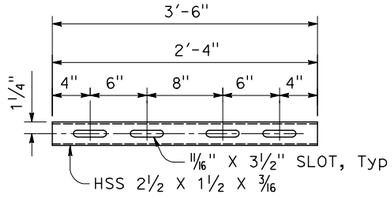

HSS 3 X 2 X 3/16 RAIL

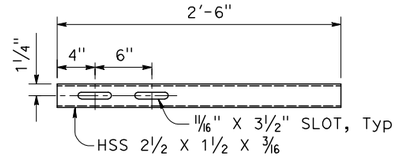

HSS 3 X 2 X 3/16 RAIL

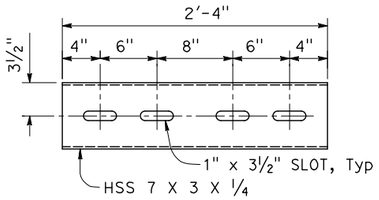

HSS 8 X 4 X 5/16 RAIL

STANDARD SLEEVES DETAILS

NO SCALE

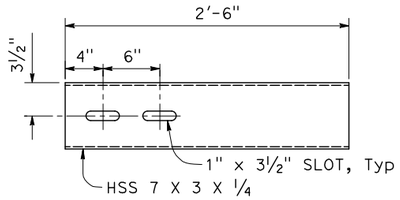

HSS 8 X 4 X 5/16 RAIL

EXPANSION SLEEVES DETAILS

NO SCALE

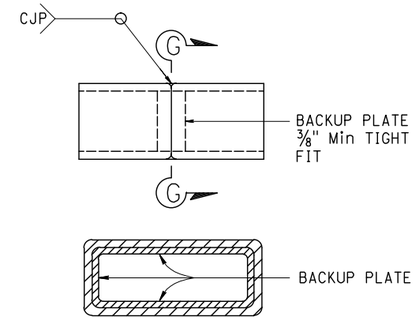

SECTION G-G

ALTERNATE TUBE WELDED STANDARD SPLICE

NO SCALE

NOTES:

1. HS bolts with nut and washers, snug tightened, and thread locking system.
2. Use ½"ø X 3 5/16 BOLTS (HSS 3 X 2 X 3/16)
   Use ¾"ø X 5 5/16 BOLTS (HSS 8 X 4 X 5/16)
3. Each rail length must be continuous over a minimum of two posts.
4. The fabricator must check that the tubular sleeve splices conform to the dimensions indicated to assure proper clearance.
5. Except for expansion splices, not more than one splice permitted per same side of post.

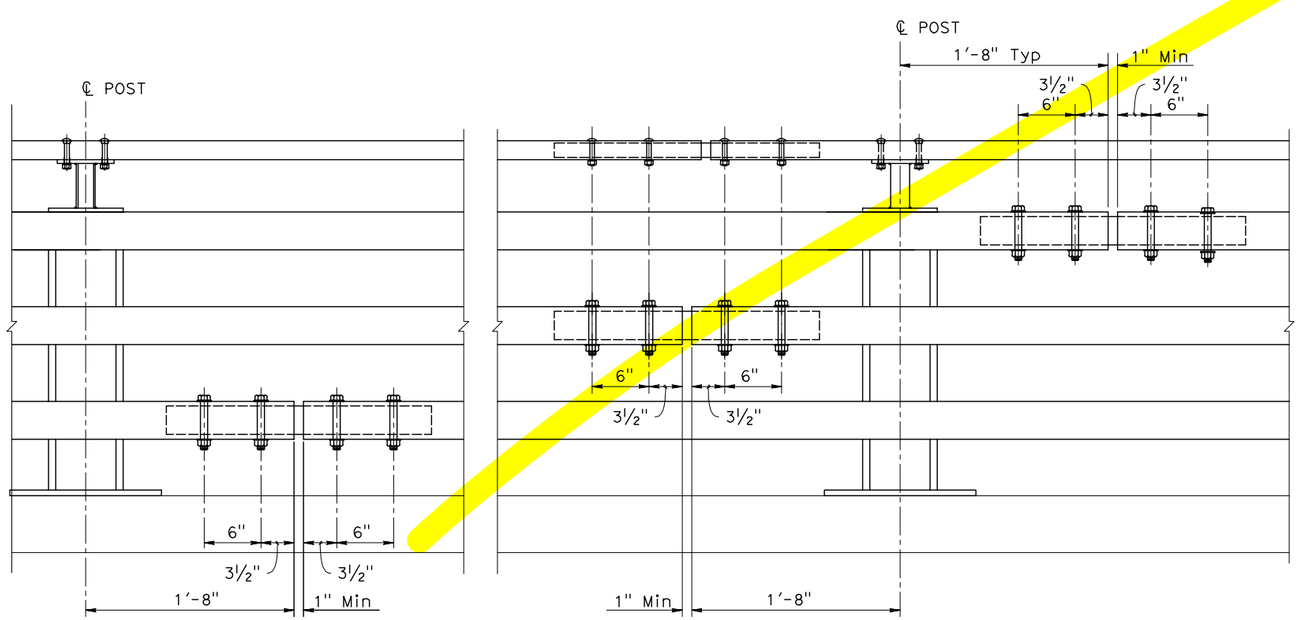

STANDARD SPLICE

NO SCALE

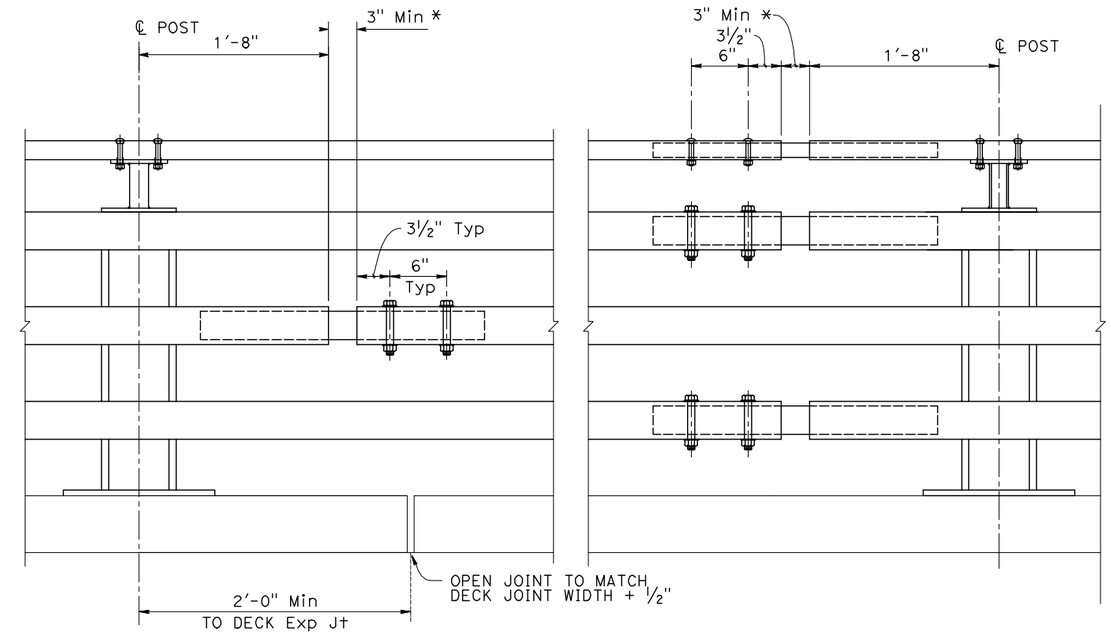

EXPANSION SPLICE

NO SCALE

* MATCH DECK OR WALL JOINT

DESIGN OVERSIGHT / SIGN OFF DATE	DESIGN	BY T. PHAM	CHECKED Y. REN	PREPARED FOR THE SACRAMENTO COUNTY DEPARTMENT OF TRANSPORTATION	JASON HICKEY, PROJECT ENGINEER
	DETAILS	BY G. BOYKO	CHECKED T. PHAM		BRIDGE NO. 24C0606
	QUANTITIES	BY G. GUARDADO	CHECKED N. FELDE		POST MILES

LAGUNA CREEK BRIDGE (REPLACE)

CALIFORNIA ST-75 BRIDGE RAIL DETAILS No.4

DESIGN DETAIL SHEET (ENGLISH) (REV.7/16/10)

ORIGINAL SCALE IN INCHES FOR REDUCED PLANS 0 1 2 3

UNIT: X
PROJECT NUMBER & PHASE: X

DISREGARD PRINTS BEARING EARLIER REVISION DATES → REVISION DATES (PRELIMINARY STAGE ONLY) 05/27/13 11/06/20

SHEET 20 OF 23

FILE => $REQUEST

CONTRACT NO.: X

PROJECT ID:

V:\Sacramento Co-SA-13108-Alta Mesa Rd Bridge Replacement\CADD\Structures\20 AM_ST-75 (H).dwg 10/29/2020 4:21 PM
USERNAME => $USER DATE PLOTTED => $DATE TIME PLOTTED => $TIME

DIST	COUNTY	ROUTE	POST MILES TOTAL PROJECT	SHEET No	TOTAL SHEETS
03	SAC				

REGISTERED CIVIL ENGINEER 11/6/20 DATE

PLANS APPROVAL DATE

REGISTERED PROFESSIONAL ENGINEER TRUONG VIET PHAM No. 81809 Exp. 3/31/22 CIVIL STATE OF CALIFORNIA

The State of California or its officers or agents shall not be responsible for the accuracy or completeness of scanned copies of this plan sheet.

SACRAMENTO COUNTY
411 BRANCH CENTER ROAD
SACRAMENTO, CA 95827

MARK THOMAS & COMPANY, INC.
7300 FOLSOM BOULEVARD, SUITE 203
SACRAMENTO, CA 95826

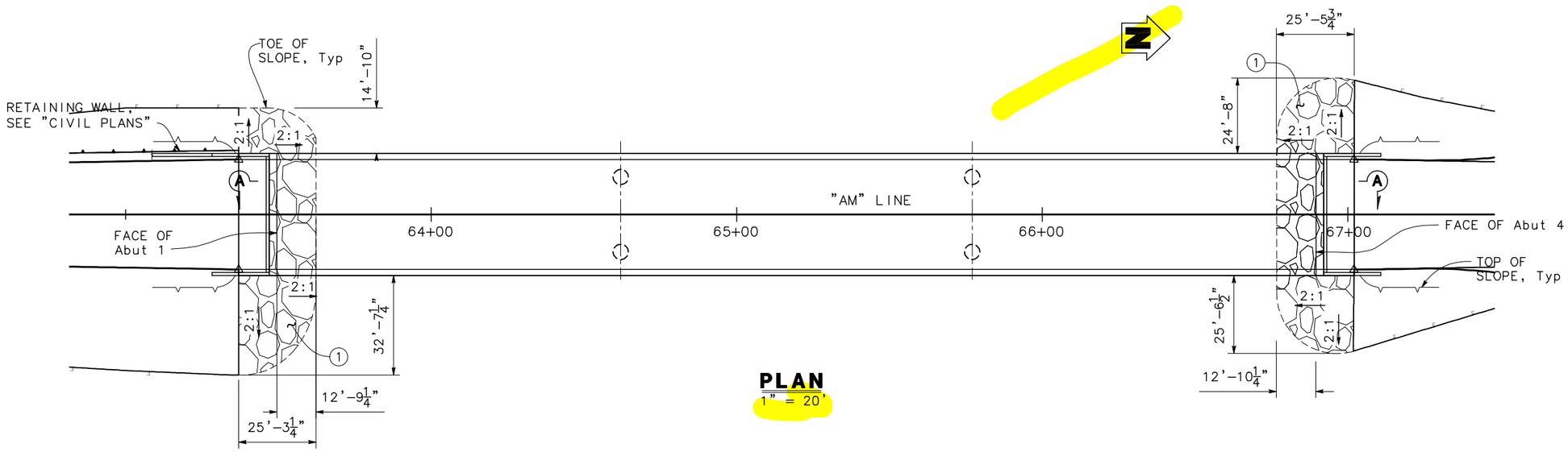

PLAN
1" = 20'

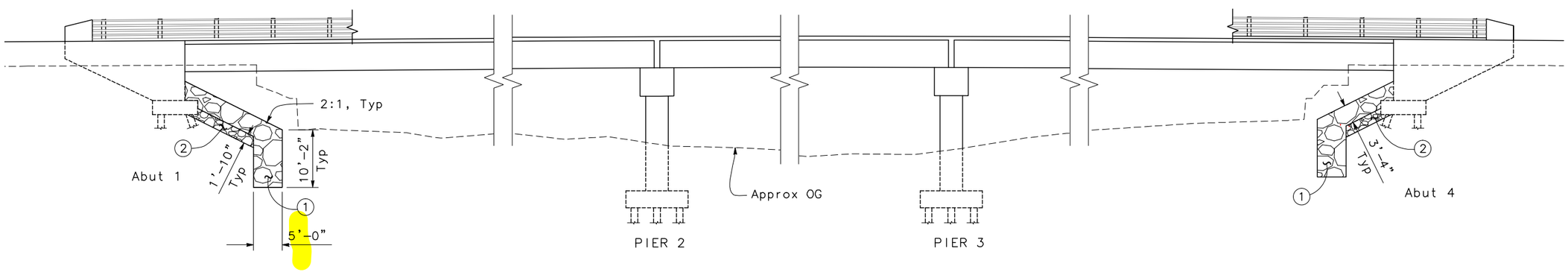

SECTIONS A-A
1" = 10'

LEGEND:

1. ROCK SLOPE PROTECTION (1/4 TON, METHOD B)
2. ROCK SLOPE PROTECTION (BACKING No. 1, METHOD B)

NOTE:
THE CONTRACTOR SHALL VERIFY ALL CONTROLLING FIELD DIMENSIONS BEFORE ORDERING OR FABRICATING ANY MATERIAL.

DESIGN	BY T. PHAM	CHECKED Y. REN	
DETAILS	BY G. BOYKO	CHECKED T. PHAM	
QUANTITIES	BY G. GUARDADO	CHECKED N. FELDE	

DESIGN OVERSIGHT

SIGN OFF DATE

PREPARED FOR THE SACRAMENTO COUNTY DEPARTMENT OF TRANSPORTATION

JASON HICKEY
PROJECT ENGINEER

BRIDGE NO. 24C0606
POST MILES

LAGUNA CREEK BRIDGE (REPLACE)
ROCK SLOPE PROTECTION

DESIGN DETAIL SHEET (ENGLISH) (REV.7/16/10)

ORIGINAL SCALE IN INCHES FOR REDUCED PLANS 0 1 2 3

UNIT: X
PROJECT NUMBER & PHASE: X

DISREGARD PRINTS BEARING EARLIER REVISION DATES

REVISION DATES (PRELIMINARY STAGE ONLY): 09/08/13 01/30/14 12/02/14 05/18/15 08/31/16 09/15/16

SHEET 21 OF 23

FILE => $REQUEST

CONTRACT NO.: X PROJECT ID:

V:\Sacramento Co-SA-13108-Alta Mesa Rd Bridge Replacement\CADD\Structures\21 AM_RSP.dwg 10/29/2020 3:33 PM

TIME PLOTTED => $TIME DATE PLOTTED => $DATE USERNAME => $USER